RE 125
Signal Generator
Service Manual

Volume I

re

RE 125
Signal Generator
Service Manual

SAFETY PRECAUTIONS FOR LINE-POWERED EQUIPMENT

All line-powered equipment can be dangerous. Therefore, certain basic rules and precautions must be observed to ensure the best possible safety for users, service personnel, as well as third parties. At RE TECHNOLOGY AS we have taken great care during the design and production of our equipment. However, safety may be impaired by incorrect installation, handling, or intervention.

WARNING

Ensure that the line cable, connectors, and power outlet all have the correct configuration, to establish a protective earth. Disconnecting the protective earth conductor, inside or outside the equipment, may potentially be hazardous to the operator. Removing the covers may expose parts carrying potentially dangerous voltages.

INSTALLATION

This is a Safety Class I unit which requires protective earthing via the IEC power inlet. Before switching on, the unit must be connected via the third wire in the power cable to a protective earth contact in the line socket. The protective action must not be negated by using an extension cord (power cable) without a protective conductor (protective earth). Grounding one conductor of a two-conductor outlet is not sufficient protection. Ensure that the line fuse has the correct value according to the voltage and power consumption. If the unit requires separate signal grounding, through external connections to the unit chassis, do not disconnect the protective earth.

SERVICE

Only trained service personnel should attempt to dismantle and repair the unit. Take great care during the installation and service of the unit, especially when adjusting or measuring an open unit under voltage. Before removing any covers, switch off the unit and remove the line cable from the power outlet.
Capacitors inside the unit may hold dangerous charges for a considerable time after the unit has been switched off. If it is necessary to replace components in the line connected partition or area, use only new parts of the correct and approved type. Take special care to maintain or re-establish the protective earthing. The conductivity must be measured after the service or repair is finished. Do not remove any warning labels. Replace any damaged or illegible labels with new labels.

BACK-UP BATTERIES

For units with lithium back-up batteries, ensure, when replacing them, that they are of the same type and are correctly installed before you switch the power on to the unit. Do not recharge the batteries or expose them to temperatures above 100 °C (212 °F). Dispose of used batteries responsibly, according to your national/local guidelines. The batteries contain chemicals which are harmful to the environment. When you dispose of the unit itself, first remove the batteries and dispose of them separately.

SAFETY SYMBOLS

Warning. The unit will be marked with this symbol when it is necessary for the user to refer to the manual.

Ground terminal (sometimes used in the manual to indicate circuit common connected to the chassis).

Attention. Observe precautions for handling Electrostatic Sensitive Devices.

Danger. Live voltage exceeding 1000 V.

Warning label for laser radiation. The product is marked with this symbol if it is necessary to protect against laser radiation which is invisible and can cause permanent damage to the eye.

Use of Product Names. The product names mentioned herein are used for identification purposes only, and may be trademarks and/or registered trademarks of their respective companies.

Copyright© 1994 RE TECHNOLOGY AS
All rights reserved. No part of this publication may be reproduced or distributed in any form or by any means without prior consent in writing from RE TECHNOLOGY AS.

SHORT CONTENTS

Section

1. INTRODUCTION

2. PRINCIPLE OF OPERATION

3. DISMANTLING

4. CALIBRATION AND MAINTENANCE

5. DIGITAL MOTHERBOARD

6. AUDIO CLOCK BOARD

7. ANALOG MOTHERBOARD

8. SMPS UNIT

9. SYNTHESIZER 1

10. SYNTHESIZER 2

11. REFERENCE/MODULATION BOARD

12. FM MODULATOR

13. FREQUENCY CONVERTER

14. OUTPUT AMPLIFIER

15. BNC CONNECTOR BOARD

16. POWER ANNUNCIATOR

17. CPU BOARD

18. RF ATTENUATOR

19. KEYBOARD/DISPLAY BOARD

20. C-QUAM MODULATOR

21. AUDIO GENERATOR

22. FM STEREO GENERATOR

23. RDS/VRF GENERATOR

24. EQUIPMENT AND ACCESSORIES

25. SPECIFICATIONS

26. INDEX

27. MISCELLANEOUS

TABLE OF CONTENTS

Section **Page**

1. INTRODUCTION

1.1 General Description 1
1.2 Service Manual 4

2. PRINCIPLE OF OPERATION

2.1 General Description 5
2.2 Principle of Operation 6
2.2.1 Reference/Modulation Board 6
2.2.2 Synthesizer 7
2.2.3 FM Modulator 7
2.2.4 Frequency Converter 7
2.2.5 Output Unit 7
2.2.6 CPU 8
2.2.7 Power Supply 8
2.2.8 Attenuator 8
2.2.9 Audio Generator Option 8
2.2.10 C-QUAM Modulator Option 9
2.2.11 FM Stereo Generator Option 9
2.2.12 RDS/VRF Generator Option 9
2.3 Mechanical Construction 9

3. DISMANTLING

3.1 Overview 11
3.2 Top and Bottom 13
3.3 Front Panel Section 13
3.3.1 RF Attenuator 14
3.3.2 Power Annunciator 15
3.3.3 Keyboard/Display 15
3.4 Rear Panel Section 16
3.5 Analog Section 17
3.6 Digital Section 19
3.6.1 CPU 19
3.6.2 Audio Generator Digital Board 19
3.6.3 Switch Mode Power Supply (SMPS) 20
3.6.4 Digital Motherboard and Audio Clock Board 21

4. VERIFICATION AND MAINTENANCE

4.1 Performance Check 23
4.2 Required Test Equipment 24
4.3 Special Adjustment Points 25
4.4 Maintenance of Air Filters 26
4.5 RF Output Frequency 27
4.6 RF Output Level Test 28
4.7 RF Harmonics Test 29
4.8 Amplitude Modulation Tests 29
4.8.1 AM Depth 29
4.8.2 AM Frequency Response 30
4.8.3 AM Distortion 31
4.8.4 Residual AM 32
4.8.5 Incidental FM 33
4.8.6 Incidental PM 34
4.9 Measurement of AM Stereo L/R Separation 35
4.10 Frequency Modulation Tests 36
4.10.1 FM Deviation Accuracy Versus RF Frequency 36
4.10.2 Deviation Accuracy Versus FM Deviation 36
4.10.3 External RDS/MPX Input 37
4.10.4 FM Distortion 38
4.10.5 Residual FM 39
4.10.6 Incidental AM 40
4.11 Measurement of FM Stereo L/R Separation 41
4.11.1 Overload Protection Circuit 43
4.12 RDS/VRF Tests 44
4.12.1 RDS/VRF level 44
4.12.2 RDS/VRF phase 45
4.13 Sweep 46
4.14 Internal Modulation Output 47
4.15 Frequency Reference 48

5. DIGITAL MOTHERBOARD

5.1 Circuit Description 49
5.2 Schematic Diagrams 49
5.3 Component Locations 49
5.4 Parts List 49

6. AUDIO CLOCK BOARD

6.1 Circuit Description 51
6.2 Schematic Diagrams 51
6.3 Component Locations 51
6.4 Parts List 51

7. ANALOG MOTHERBOARD

7.1 Circuit Description 53
7.2 Schematic Diagrams 53
7.3 Component Locations 53
7.4 Parts List 53

8. SMPS UNIT

8.1 Circuit Description 55
8.1.1 SMPS Main Board 56
8.1.2 SMPS Driver Board 56
8.2 Adjustments 56
8.2.1 +5 V Output 57
8.3 Schematic Diagrams 57
8.4 Component Locations 57
8.5 Parts List 57

9. SYNTHESIZER 1

9.1 Circuit Description 59
9.1.1 Main CPU Interface 60
9.1.2 48 MHz Phase Locked Loop 60
9.1.3 Numerically Controlled Oscillator 60
9.2 Adjustments 60
9.2.1 48 MHz PLL 61
9.2.2 NCO & Output Test 61
9.3 Schematic Diagrams 62
9.4 Component Locations 62
9.5 Parts List 62

10. SYNTHESIZER 2

10.1 Circuit Description 63
10.1.1 Counter Loop 64
10.1.2 Translation Loop 64
10.1.3 Acquisition Circuit 64
10.1.4 VCO 1 and VCO 2 65
10.1.5 Divide by N Counter 65
10.2 Adjustments 65
10.2.1 VCO 1 (Counter Loop) 65
10.2.2 VCO 2 (Translation Loop) 66
10.2.3 Acquisition Circuit 66
10.3 Schematic Diagrams 66
10.4 Component Locations 66
10.5 Parts List 66

11. REFERENCE/MODULATION BOARD

11.1 Circuit Description 67
11.1.1 10 MHz VCXO 67
11.1.2 10 MHz Reference Oscillator 68
11.1.3 AF Signal Attenuation 69
11.1.4 AM Stereo Matrix 69
11.1.5 FM Pre-emphasis 70
11.1.6 Power and Interface 70
11.2 Adjustments 70
11.2.1 Reference Oscillator Frequency 70
11.2.2 Voltage-controlled Crystal Oscillator 71
11.2.3 AF Attenuator 71
11.2.4 AM Modulation Signals 71
11.2.5 FM Modulation Signals 72
11.2.6 Temperature Guard 73
11.3 Schematic Diagrams 73
11.4 Component Locations 73
11.5 Parts List 73

12. FM MODULATOR

12.1 Circuit Description 75
12.1.1 FM Modulation Loop 76
12.1.2 Output Loop 77
12.2 Adjustments 78
12.3 Schematic Diagram 78
12.4 Component Locations 78
12.5 Parts List 78

13. FREQUENCY CONVERTER

13.1 Circuit Description 79
13.1.1 Automatic Level Control Loop 80
13.2 Adjustment 81
13.3 Schematic Diagrams 81
13.4 Component Locations 81
13.5 Parts List 81

14. OUTPUT AMPLIFIER

14.1 Circuit Description 83
14.1.1 RF Filter and Level Detector 83
14.1.2 AM Modulator and Power Amplifier 84
14.1.3 AF Channel 84
14.2 Adjustments 85
14.2.1 Electronic Attenuator and AM-modulator Offset 85
14.2.2 AF Channel Offset and Gain 85
14.2.3 Output Power Level 86
14.2.4 Output Level Flatness 86
14.2.5 Incidental PM 87

14.3 Schematic Diagrams 87
14.4 Component Locations 87
14.5 Parts List 87

15. BNC CONNECTOR BOARD

15.1 Circuit Description 89
15.2 Schematic Diagrams 89
15.3 Component Locations 89
15.4 Parts List 89

16. POWER ANNUNCIATOR

16.1 Circuit Description 91
16.2 Schematic Diagrams 91
16.3 Component Locations 91
16.4 Parts List 91

17. CPU BOARD

17.1 Circuit Description 93
17.1.1 CPU with RAMs and EPROMs 93
17.1.2 2 Mbit/s Serial Interface 93
17.1.3 IEEE 488 Interface 94
17.1.4 Address and Mode Switch 95
17.1.5 Battery Back-up 95
17.2 Schematic Diagrams 95
17.3 Component Locations 95
17.4 Parts List 95

18. RF ATTENUATOR

18.1 Circuit Description 97
18.2 Schematic Diagrams 97
18.3 Component Locations 97
18.4 Parts List 97

19. KEYBOARD/DISPLAY BOARD

19.1 Circuit Description 99
19.1.1 2 Mbit/s Serial Bus Interface 100
19.1.2 Keyboard Matrix Scanner 100
19.1.3 Display Interface 100
19.1.4 Fan Regulator 100
19.1.5 RF Attenuator Circuit 100
19.1.6 LED Drivers 101
19.2 Schematic Diagrams 101
19.3 Component Locations 101
19.4 Parts List 101

20. C-QUAM MODULATOR

20.1 Circuit Description 103
20.2 Adjustments 105
20.3 Schematic Diagrams 107
20.4 Component Locations 107
20.5 Parts List 107

21. AUDIO GENERATOR

21.1 Circuit Description 109
21.1.1 Signal Processor Board 109
21.1.2 Audio Generator Analog Board 110
21.2 Adjustments 112
21.2.1 Offset 113
21.2.2 Output Amplifiers, DC Zero 113
21.2.3 Output Amplifiers, CMRR 114
21.2.4 Distortion 114
21.2.5 Level 115
21.3 Schematic Diagrams 115
21.4 Component Locations 115
21.5 Parts List 115

22. FM STEREO GENERATOR

22.1 Circuit Description 117
22.1.1 Input Buffers and Function Control 117
22.1.2 Modulators 119
22.1.3 Clock Generator and Pilot Generator 120
22.1.4 Composite Filter, Aux. Input, and Outputs 120
22.1.5 Main Computer Interface 121
22.2 Adjustments 121
22.2.1 DC Offset 122
22.2.2 Gain, Input 123
22.2.3 38 kHz Residual and 114 kHz Spurious 123
22.2.4 Sidebands 124
22.2.5 L/R Separation 124
22.2.6 M/S Separation 125
22.2.7 Gain, Output and Mono 126
22.2.8 133 kHz Spurious 126
22.2.9 Pilot Phase 126
22.2.10 Pilot Gain 127
22.2.11 Aux. Gain 127
22.2.12 Readjustment of 38 kHz and 114 kHz 128
22.2.13 Recalibration of Composite Output Level 128
22.3 Schematic Diagram 128
22.4 Component Locations 128
22.5 Parts List 128

23. RDS/VRF GENERATOR

23.1 Circuit Description 129
23.1.1 Main Computer Interface 130
23.1.2 Micro Controller 130
23.1.3 Digital Signal Processor 130
23.1.4 D/A Converter & Output Filter 131
23.1.5 Pilot Synchronization 131
23.2 Adjustments 132
23.2.1 RTC Clock Frequency 132
23.2.2 20.52 MHz VCXO, Clock Frequency 132
23.2.3 Pilot Detector 133
23.2.4 Pilot PLL 133
23.2.5 57 kHz Band-pass Filter 133
23.2.6 RDS/VRF Level 134
23.2.7 RDS/VRF Phase 134
23.2.8 MPX Gain 135
23.3 Schematic Diagrams 135
23.4 Component Locations 135
23.5 Parts List 135

24. EQUIPMENT AND ACCESSORIES

24.1 Standard Equipment and Accessories 137
24.2 Available Options 138
24.3 Optional Equipment and Accessories 139

25. SPECIFICATIONS

25.1 Performance Specifications 141

26. INDEX

27. MISCELLANEOUS

27.1 List of Abbreviations 155
27.2 Mechanical Assembly 157

LIST OF FIGURES

Figures		Page
Fig. 2.1	Block Diagram of RE 125	5
Fig. 2.2	Block Diagram of RE 125 Analog Section	6
Fig. 3.1	RE 125 Sections, Bottom View	11
Fig. 3.2	Removing the Front Panel Cover	13
Fig. 3.3	Removing the Keyboard and Display	15
Fig. 3.4	Removing the Rear Panel	16
Fig. 3.5	Cables and Boards in the Analog Section	17
Fig. 3.6	Removing the Output Amplifier	18
Fig. 3.7	Removing the CPU	19
Fig. 3.8	Removing SMPS Mounting Screws	20
Fig. 3.9	Removing The SMPS	21
Fig. 4.1	Adjustment Points on the Top of the RE 125	25
Fig. 4.2	Adjustment Points on the Bottom of the RE 125	26
Fig. 4.3	Stereo Separation Measurement Set-up	42
Fig. 4.4	Oscilloscope Trace, FM Stereo Separation	43
Fig. 4.5	Oscilloscope Trace, RDS-Pilot Phase Check	45
Fig. 8.1	Block Diagram of the SMPS Unit	55
Fig. 9.1	Block Diagram of Synthesizer 1	59
Fig. 10.1	Block Diagram of Synthesizer 2	63
Fig. 11.1	Block Diagram of Reference Oscillator	67
Fig. 11.2	Block Diagram of Modulation Control Circuit	69
Fig. 12.1	Block Diagram of FM Modulator	76
Fig. 13.1	Block Diagram of Frequency Converter	80
Fig. 14.1	Block Diagram of the Output Amplifier	83
Fig. 17.1	Format of Data on Serial Interface	93
Fig. 19.1	Block Diagram of Keyboard/Display	99
Fig. 20.1	Block Diagram of C-QUAM Modulator	103
Fig. 21.1	Block Diagram of the Signal Processor Board	109
Fig. 21.2	Block Diagram of the Analog Board	111
Fig. 22.1	Block Diagram of FM Stereo Generator	118
Fig. 22.2	Adjustment of LR Separation	124
Fig. 22.3	FM Stereo Pilot Phase adjustment	127
Fig. 23.1	Block Diagram of RDS/VRF Generator	129
Fig. 23.2	Oscilloscope trace, RDS-Pilot Phase Adjustment	134
Fig. 25.1	FM Stereo Pre-emphasis Weighting	144
Fig. 27.1	Mechanical Assembly Drawing	157

LIST OF TABLES

Tables		Page
Table 4.1	Required Test Equipment	24
Table 21.1	Audio Generator Set-up	112
Table 22.1	FM Stereo Generator Set-up	119
Table 24.1	Standard Equipment and Accessories	137
Table 24.2	Available Options	138
Table 24.3	Optional Equipment and Accessories	139

LIST OF CIRCUIT BOARDS

Name	Code No.	Diagram
SMPS Main Board	901-850	985-294
SMPS Switch Driver	901-851	985-295
FM Modulator	901-857	985-301
Frequency Converter	901-858	985-302
C-QUAM Modulator	901-859	985-303
Power Annunciator	901-865	985-280
Audio Generator Digital	901-867	985-316
Audio Generator Analog	901-868	985-317
FM Stereo Generator	901-871	985-318
RF Attenuator	902-023	985-458
CPU Board	902-052	985-424
Audio Clock board	902-053	985-420
Digital Motherboard	902-054	985-421
Analog Motherboard	902-055	985-422
Reference/Modulation board	902-056	985-423
Synthesizer 1	902-057	985-419
Synthesizer 2	902-058	985-449
BNC Connector board	902-059	985-425
RDS/VRF Generator	902-060	985-512
Output Amplifier	902-093	985-455
Dual Output RF Attenuator	902-139	985-496
Keyboard	902-151	985-513

This page is intentionally left blank.

1. INTRODUCTION

The purpose of this Service Manual for the RE 125 Signal Generator is to provide all information necessary to:

- understand the principles of operation for the RE 125
- carry out preventive maintenance, regular adjustments and verification
- perform troubleshooting to board level

To fulfil these objectives, the Service Manual gives detailed descriptions of the electrical and mechanical features of the RE 125, including the various options.

All operating instructions, other information concerning the operational aspects as well as installation instructions are described in the RE 125 Operator Manual.

1.1 General Description

The RE 125 is a high-performance signal generator designed specifically for use in the manufacture of broadcast radios used in the frequency band from 100 kHz to 250 MHz.

With its modular design and a wide range of options the RE 125 Signal Generator meets the most demanding requirements for automated test system applications. With all options installed it becomes a very compact signal source, capable of generating a complete RF signal including AM/FM stereo baseband signals as well as RDS and VRF information.

In the standard instrument the key features are:

Frequency range	100 kHz to 250 MHz with 1 Hz resolution plus underrange to 50 kHz
Frequency switching time	< 15 ms
Output level	-123.9 to 23 dBm with 0.1 dB resolution
Level switching time	< 2.5 ms
Powerful modulators	AM with < 0.1 % THD and > 80 dB S/N FM with < 0.01 % THD and > 80 dB S/N

Simultaneous modulation	AM Mono/FM Mono and Stereo, with modulation source and level freely selected
Analog RF sweep	Width and time can be set independently. A sweep ramp output is available at the rear panel. Both sawtooth and triangular sweeps are possible
Carrier Noise Pulse	For testing receiver noise blanking circuits. Level and pulse duration may be set freely
External Reference Input	Accepts 1, 2, 5 and 10 MHz

A wide range of options may be installed:

Audio Generator	Provides a 2 channel modulation source capable of generating sinewave, sawtooth and triangular signals for analog RF sweeps
FM Stereo Generator	Less than 0.02 % THD, better than 80 dB S/N ratio and 65 dB stereo separation
AM Stereo Modulator	According to the Motorola C-QUAM system with less than 0.2 % THD, better than 70 dB S/N ratio and 45 dB stereo separation, factory installed
RDS/VRF Generator	Capable of generating RDS/VRF signals according to DIN and EBU standards
Oven-controlled Reference Oscillator	Offering 0.1 ppm frequency accuracy and temperature stability, factory installed
Dual RF Output	Reliable switching of the RF between two outputs, for example for dual test fixture applications, factory installed

The switching speed of < 15 ms for frequency changes and < 2.5 ms for level changes makes the RE 125 ideal for automated testing. In addition, the high speed IEEE 488 interface, which is a standard feature, offers storage of up to 100 complete instrument set-ups allowing you to program even the most demanding applications for optimum performance.

The RF output attenuator, traditionally a weak spot in automatic RF test systems used by high-volume manufacturers, has been given special attention. The new attenuator uses a switch element which has undergone a comprehensive program of tests to show its reliability.

The RE 125 built-in diagnostic software and modular design facilitate troubleshooting, so minimizing downtime.

The RE 125 meets most applications by fitting different options. In the standard configuration the generator is a black-box unit intended for production applications, that is the RE 125 has no keyboard and display for manual operation. For laboratory or test engineering applications a front panel can be added in the following ways:

- A factory-installed front panel for the standard instrument, that is the generator is still intended for rack mounting in system applications.
- A desktop model option where the generator is delivered in a desktop cabinet with full front panel control as a standard feature.
- A separate control panel that can be connected to the standard unit using a connector on the front of the generator. This means that the instrument can be operated manually even when it is still rack-mounted.

You can configure the RE 125 to your needs using the FM Stereo Generator, Dual Channel Audio Generator, RDS/VRF Generator, AM Stereo Modulator according to Motorola C-QUAM, Dual RF Output and Oven-controlled Reference Oscillator options.

1.2 Service Manual

This Service manual includes the following sections:

Section 1	General Introduction.
Section 2	Principle of Operation. Contains information that helps you understand the main concept of the RE 125.
Section 3	Dismantling. General description of how to get access to the individual printed circuit boards of the RE 125.
Section 4	Adjustments and Maintenance. Description of how to perform adjustments and maintenance on the RE 125.
Sections 5 to 23	Each of the sections 5 to 23 deals with one specific PC board in the RE 125. First the section describes the individual circuits on the board. Then the section describes any adjustments required. Finally there follows a schematic diagram, component locations and the parts list for the board in question.
Section 24	Equipment and Accessories. Lists of standard equipment and accessories, available options and optional equipment and accessories.
Section 25	Specifications including a list of typical measurement speeds at different instrument settings.
Section 26	Index.
Section 27	Miscellaneous. Contains a list of abbreviations used in the manual, a drawing of the mechanical assembly of the RE 125.

2. PRINCIPLE OF OPERATION

2.1 General Description

The purpose of this section is to make it easier for the operator to understand the overall concept of the RE 125.

The RE 125 is a synthesized signal generator for use in the frequency band from 100 kHz to 250 MHz and with an output level from -123.9 to +23 dBm.

Fig. 2.1 shows a simplified overall block diagram of the RE 125 Signal Generator and Fig. 2.2, a simplified block diagram of the RE 125 Analog Section.

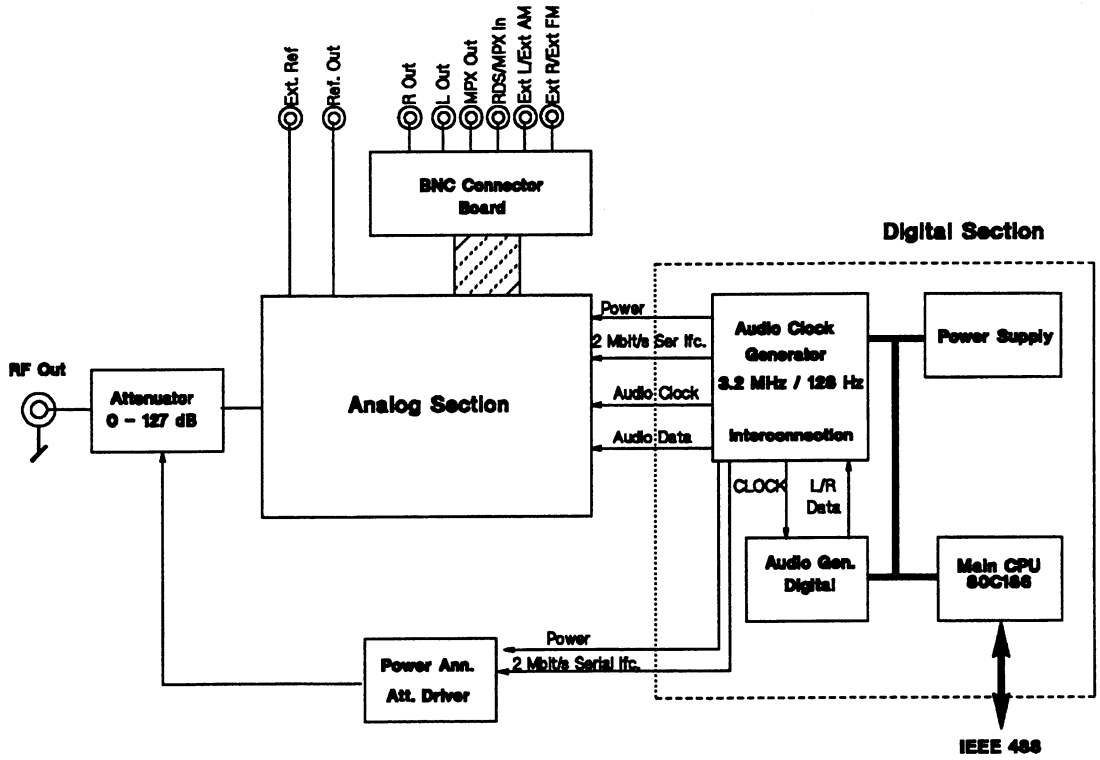

Fig. 2.1 - Block Diagram of RE 125

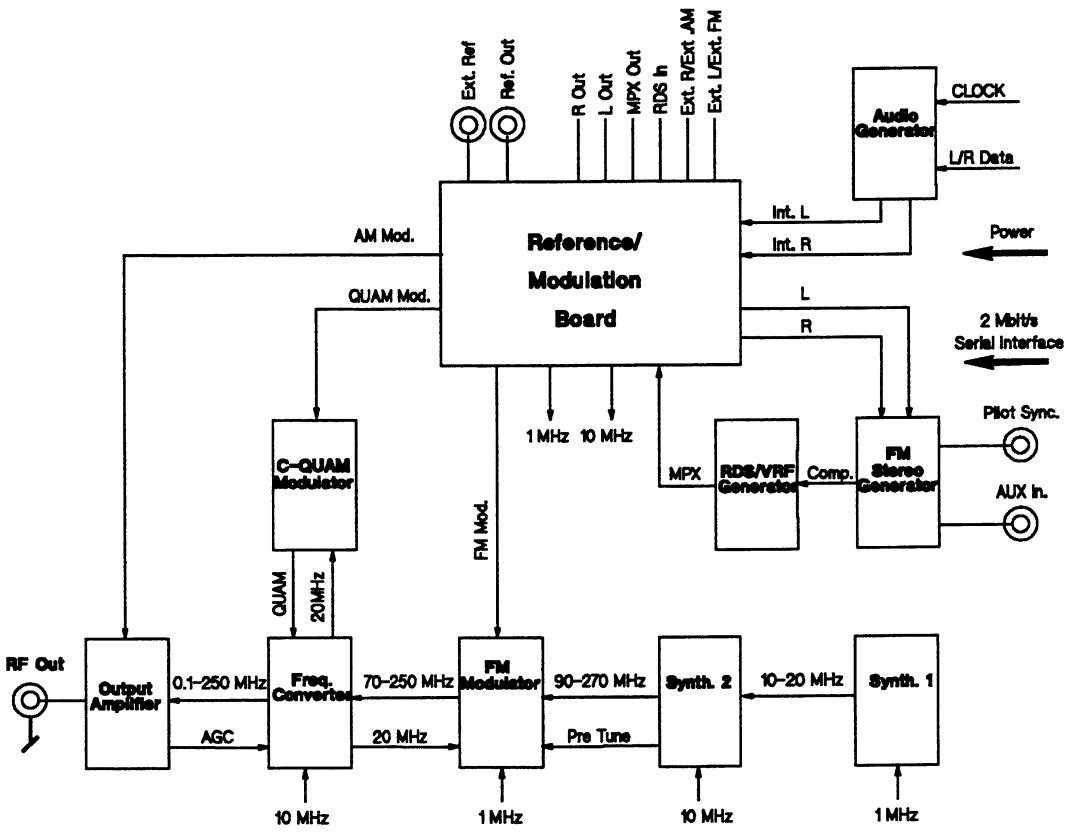

Fig. 2.2 - Block Diagram of RE 125 Analog Section

2.2 Principle of Operation

The RE 125 has 12 major functional blocks which are described in the following together with other features of the instrument.

2.2.1 Reference/Modulation Board

All frequencies within the signal generator are derived from a 10 MHz crystal oscillator having a very high spectral purity. For applications requiring improved long term stability over the standard oscillator, an oven-controlled crystal oscillator (OCXO) is available.

An external reference frequency input accepting a frequency of 1, 2, 5 or 10 MHz is a standard feature. The signal generator automatically locks to the external reference, if present, and above the threshold level.

The modulation matrix routes the various baseband signals to the modulators. The L and R inputs are variable gain inputs controlling the input sensitivity for external modulation. All other inputs have fixed gain, that is, the degree of modulation is determined by the level of the baseband signal.

The pre-emphasis circuitry and the matrix, L+R and L-R, used for AM stereo are also located on this board.

2.2.2 Synthesizer

The first part of the synthesizer chain consists of a numerically controlled oscillator (NCO) capable of generating a signal from 10 to 20 MHz with 1 Hz resolution.

The second part of the synthesizer generates a 90 to 270 MHz signal with coarse frequency resolution and adds the 10 to 20 MHz signal.

2.2.3 FM Modulator

To achieve high performance FM modulation, the AF modulation signal is translated onto the carrier frequency using a low-bandwidth FM VCO running at 80 MHz. The resulting output frequency is 70 to 250 MHz.

2.2.4 Frequency Converter

The complete frequency band from 100 kHz to 250 MHz is generated through a combination of frequency translation and frequency division.

Special care has been taken to achieve good FM performance not only in the FM band but also around the FM intermediate frequency.

The high spectral purity and low residual phase modulation required to implement AM stereo is obtained through frequency division.

2.2.5 Output Unit

The output unit incorporates two high output RF amplifiers and the AM modulator. One amplifier covers the frequency band up to 2 MHz and the other the rest up to 250 MHz. In this way the high output of +23 dBm can be reached without having to compromise on harmonics and flatness.

The AM modulator is implemented using a low-noise multiplier resulting in a S/N ratio of more than 80 dB.

2.2.6 CPU

The main CPU is an 8 MHz 80C186 microprocessor. It handles the set-up of the instrument and services the IEEE 488 interface.

Communication between the CPU and the other instrument units takes place through a 2 Mbit/s bi-directional synchronous serial bus. The serial format minimizes the number of wires going in and out of shielded compartments thus easing the filtering requirements.

2.2.7 Power Supply

To keep power dissipations within the enclosure to a minimum, an off-line switchmode power supply (SMPS) is employed. The switching noise generated by the SMPS is controlled by enclosing the unit in a highly-shielded box with efficient filtering of inputs and outputs.

2.2.8 Attenuator

The RF output attenuator is designed using mercury-wetted relays as switch elements. The specified reliability of 100 million switchings is certified through a very comprehensive program of tests.

Because of the mercury-wetted relays the attenuator, and therefore the RE 125, must not be tilted more then 30° from horizontal position.

2.2.9 Audio Generator Option

The audio generator is a true 2 channel AF synthesizer implemented using a digital signal processor resulting in high stability and very fast frequency and level changes.

In addition to sinewave signals the audio generator is also used to generate sawtooth and triangular signals for the analog RF sweep function as well as the square wave used for the carrier pulse function.

The Audio Generator Option consists of two plug-in modules, a digital board and an analog board.

2.2.10 C-QUAM Modulator Option

The C-QUAM Modulator Option is a one PCB plug-in module conforming to the Motorola C-QUAM stereo system. It creates the phase modulation part of the C-QUAM signal. The phase modulated signal is AM modulated by the Output Unit thus generating the AM stereo signal.

2.2.11 FM Stereo Generator Option

The FM Stereo Generator design is based on RE's long experience with FM stereo modulators. Through a special design high stereo separation and low noise and distortion has been obtained.

A pilot synchronization output and an auxiliary input have been provided for the use of external RDS/VRF generators.

Internally the composite output is used by the RDS/VRF option to achieve correct phase relation between the pilot and the RDS/VRF sub-carrier.

The FM Stereo Option is a one PCB plug-in module.

2.2.12 RDS/VRF Generator Option

The RDS/VRF signal is generated using a digital signal processor. By adding the RDS/VRF to the MPX signal on the RDS/VRF Generator option the phase relation between the FM Stereo Pilot and the 57 kHz sub-carrier needs no adjustment. Installing the RDS Generator Option is only a matter of plugging in one PCB.

2.3 Mechanical Construction

To keep circuit interference and radiated EMI to an absolute minimum the RE 125 uses a number of highly-shielded PCB compartments based on aluminum extrusions.

Furthermore, the PCB compartments facilitate the modular design of the RE 125.

This page is intentionally left blank.

3. DISMANTLING

This section describes how you get access to the individual printed circuit boards of the RE 125. Reassembling is not described, as it is principally just the opposite of the dismantling operation.

To help you understand the interconnections between the boards we recommend that you read section 2, **Principles of Operation**, first.

3.1 Overview

Fig. 3.1 shows the location of the individual sections, into which the RE 125 is divided:

- Front Panel,
- Rear Panel,
- Analog Section,
- Digital Section.

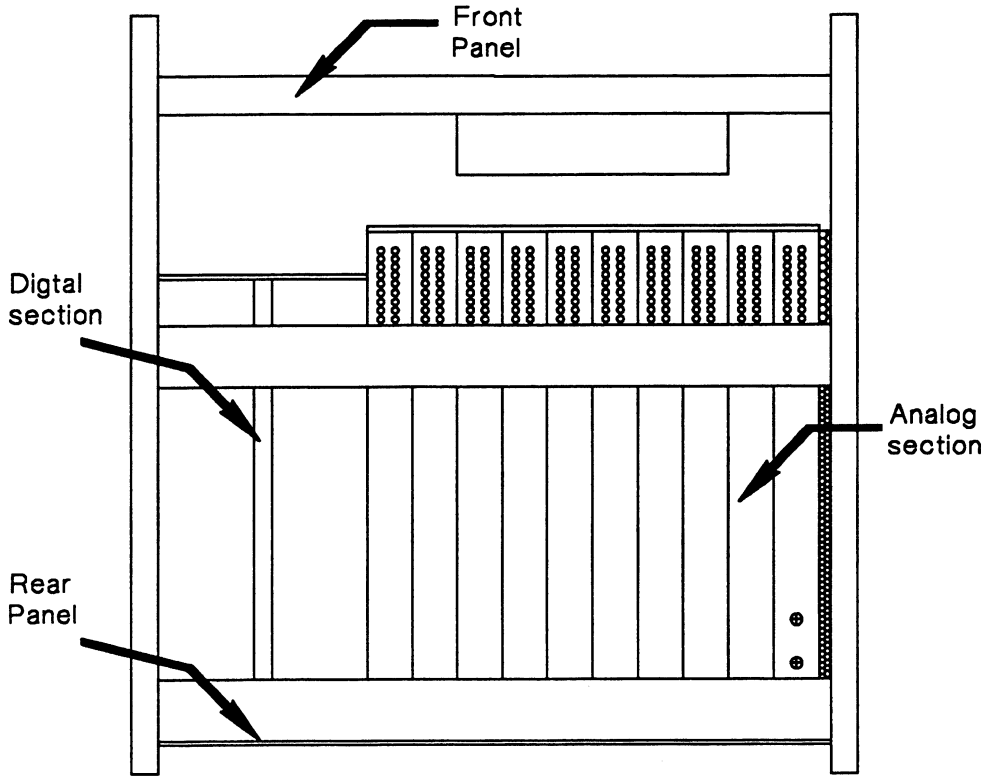

Fig. 3.1 - RE 125 Sections, Bottom View

The Front Panel in the standard version contains:

- RF Attenuator (902-023), or Dual Output Attenuator (902-139) optional,
- Power Annunciator (901-865).

There is no Power Annunciator in the Desktop model (906-178) or the model with factory installed Front Panel (906-177), which instead contains:

- Keyboard/Display board (902-151).

The Rear Panel contains:

- BNC Connector Board (902-059).

The Analog Section contains all analog boards:

- Analog Motherboard (902-055) which provides all interconnections between the individual sections of the instrument.
- Synthesizer 1 (902-057),
- Synthesizer 2 (902-058),
- Reference/Modulation board (902-056),
- FM Modulator (901-857),
- Frequency Converter (901-858),
- Output Amplifier (902-093),
- C-QUAM Modulator (901-859), Option
- Audio Generator Analog board (901-868), Option
- FM Stereo Generator (901-871), Option
- RDS/VRF Generator (902-060), Option

The Digital Section contains:

- Digital Motherboard (902-054),
- 80C186 CPU (902-052),
- Switch Mode Power Supply (901-850, 901-851),

- Audio Clock board (902-053),
- Audio Generator Digital board (901-867), Option.

3.2 Top and Bottom

The top and bottom plates are secured by 3 screws each, located at the rear of the instrument. At the front, the Front Panel holds the plates. After you have unscrewed the screws you can pull out the top and bottom plate respectively.

N O T E Clean the air filters on the top and bottom plates regularly.

3.3 Front Panel Section

The Front Panel Section contains the RF Attenuator and the Power Annunciator Board.

First remove the top and bottom plates.

To remove the Front Panel cover you unscrew the three screws shown in Fig. 3.2.

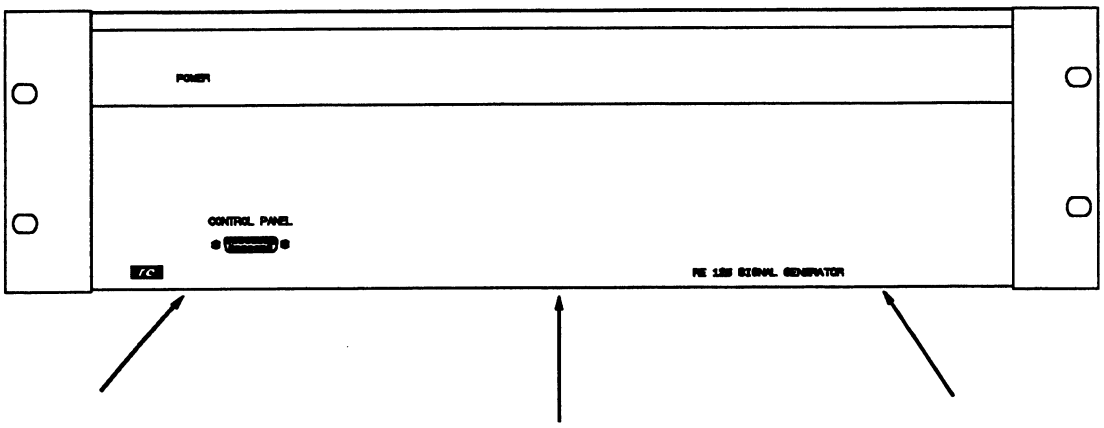

Fig. 3.2 - Removing the Front Panel Cover

To remove the entire Front Panel you only have to unscrew 2 screws on each side of the instrument. The screws are located immediately behind the rack mounting flanges. When removing the Front Panel you must disconnect the flat cable connecting the Front Panel to the Digital Section and the Dubox cable connecting the Front Panel to the fan. Finally disconnect the 2 coaxial cables between the Analog Section and the RF Attenuator (only 1 coaxial cable if you have the Desktop model, 906-178, or the model with factory installed Front Panel, 906-177).

If you want to remove the keyboard and the display, follow this procedure:

Remove top and bottom plates and the entire front panel as previously described. Pull out the control knob on the front panel. Unscrew the 3 screws on the bottom of the front panel and remove the front plate holding the keyboard and display. Now the keyboard PCB may be unscrewed (see Fig. 3.3).

3.3.1 RF Attenuator

The RF Attenuator is located just behind the Front Panel.

First remove the entire Front Panel as described previously. Then remove the Front Panel Cover. Unscrew the 2 screws and remove the RF Attenuator by disconnecting the flat cable to the Power Annunciator.

N O T E If you have the Desktop model or the model with factory installed Front Panel you separate the RF Attenuator from the Front Panel as follows: Remove the front panel cover with the keyboard and display then unscrew the two screws holding the RF Attenuator.

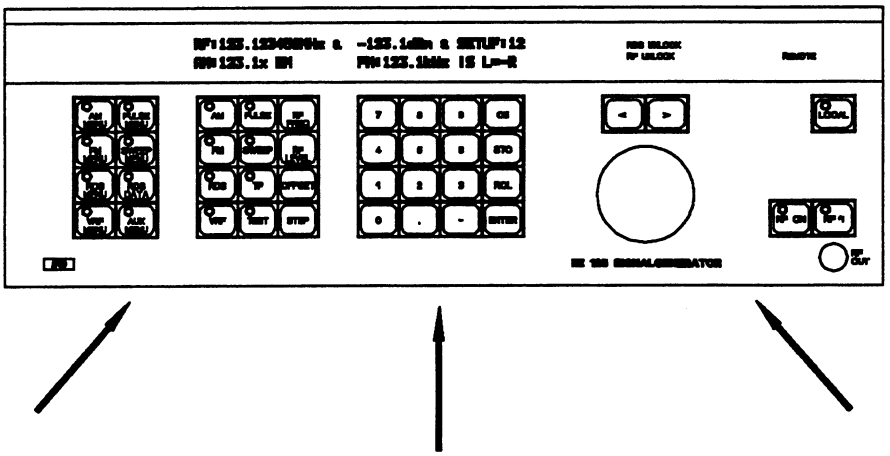

Fig. 3.3 - Removing the Keyboard and Display

3.3.2 Power Annunciator

First remove the Front Panel. Remove the top plate and disconnect the cable connecting the Power Annunciator to the Digital Motherboard at the motherboard. You may then disengage the board from the stands.

3.3.3 Keyboard/Display

First remove the entire Front Panel as described in section 3.3. Then you remove the Front Panel Cover holding the Display/Keyboard PCB. Now the keyboard PCB and the display module may be unscrewed.

3.4 Rear Panel Section

The Rear Panel Section holds the BNC Connector Board.

To remove the Rear Panel from the Analog Section unscrew the 6 screws as shown in Fig. 3.4.

Disconnect the flat cable connecting the BNC Connector Board to the Reference/Modulation Board and the two coaxial cables connecting the Rear Panel to the various boards.

Remember to remove the RF Out coaxial cable.

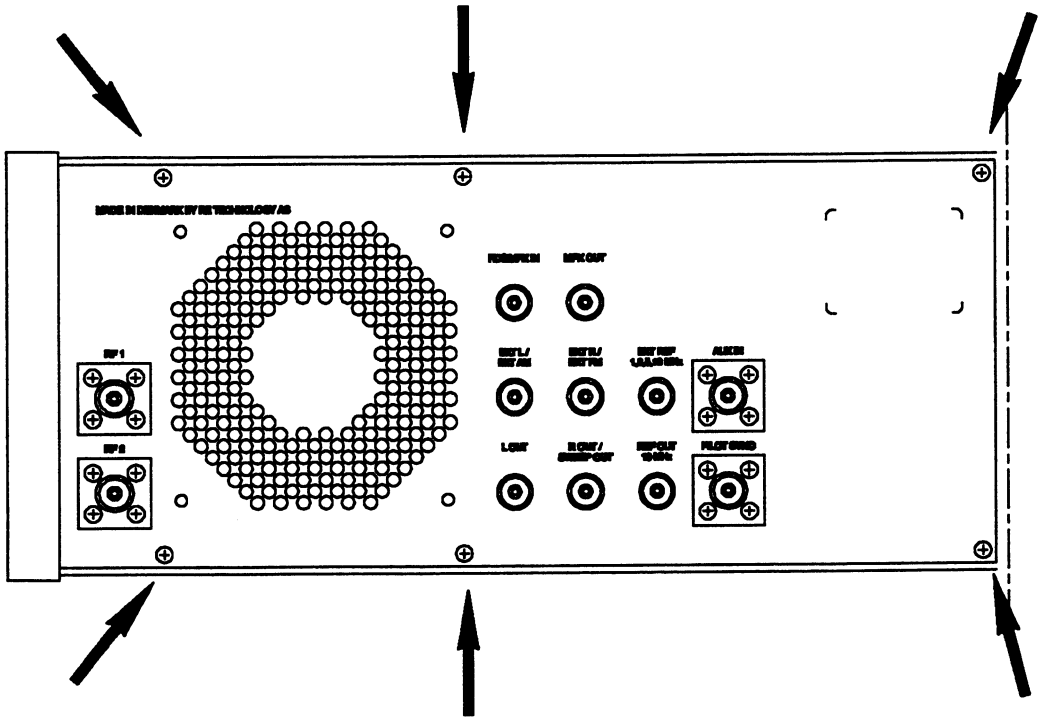

Fig. 3.4 - Removing the Rear Panel

3.5 Analog Section

To gain access to the boards in the Analog Section, remove the rear panel as shown in Fig. 3.4. Fig. 3.5 shows the cables and boards located in the analog section of the RE 125.

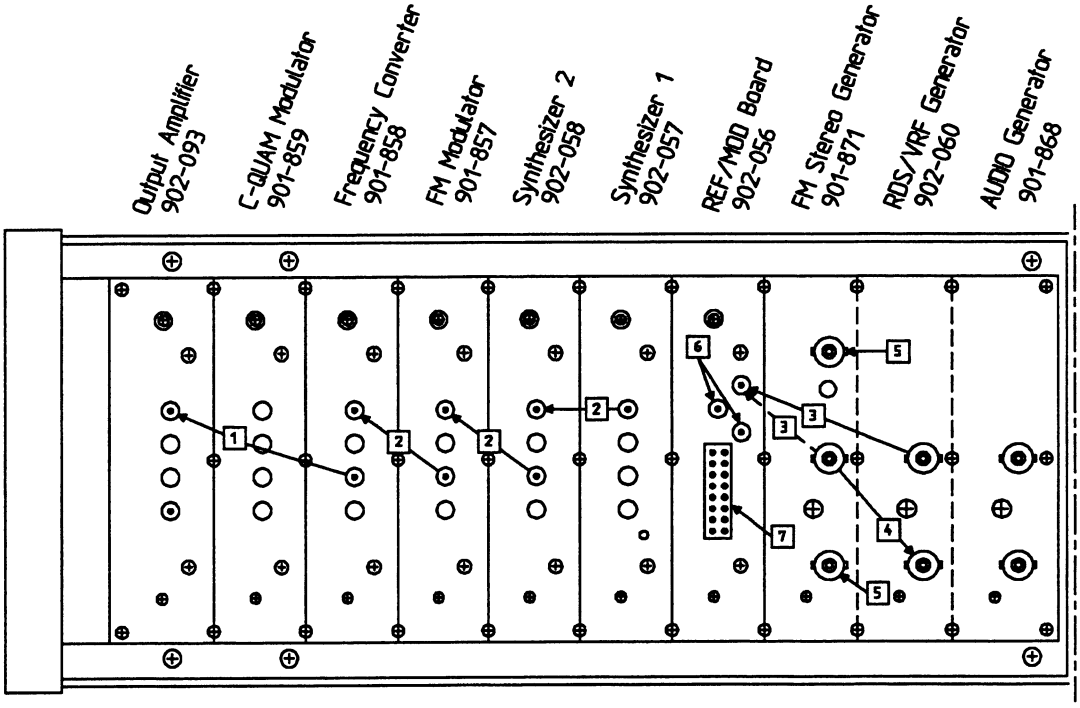

Fig. 3.5 - Cables and Boards in the Analog Section

The cable types are listed below:

1: 617-041, 70 mm SMB/SMB
2: 617-040, 40 mm SMB/SMB
3: 618-076, 100 mm SMB/BNC
4: 618-079, 110 mm BNC/BNC
5: 618-077, 150 mm BNC male/BNC female
6: 617-903, 150 mm SMB/BNC female
7: Flat cable to rear panel BNC Connector board

Cables 5,6 and 7 are connections to the rear panel.

3.5.1 Removing the Analog Boards

To remove one of the analog boards you first disconnect the coaxial cables, if any, and unscrew the 6 screws of the board in question and pull it out. When one of the three rightmost boards is to be removed, unscrew the 12 screws holding the common three-slot rear plate (see Fig. 3.5).

N O T E To remove the Output Amplifier you also have to remove the bottom plate and unscrew the two screws on the bottom of the instrument (Fig. 3.6).

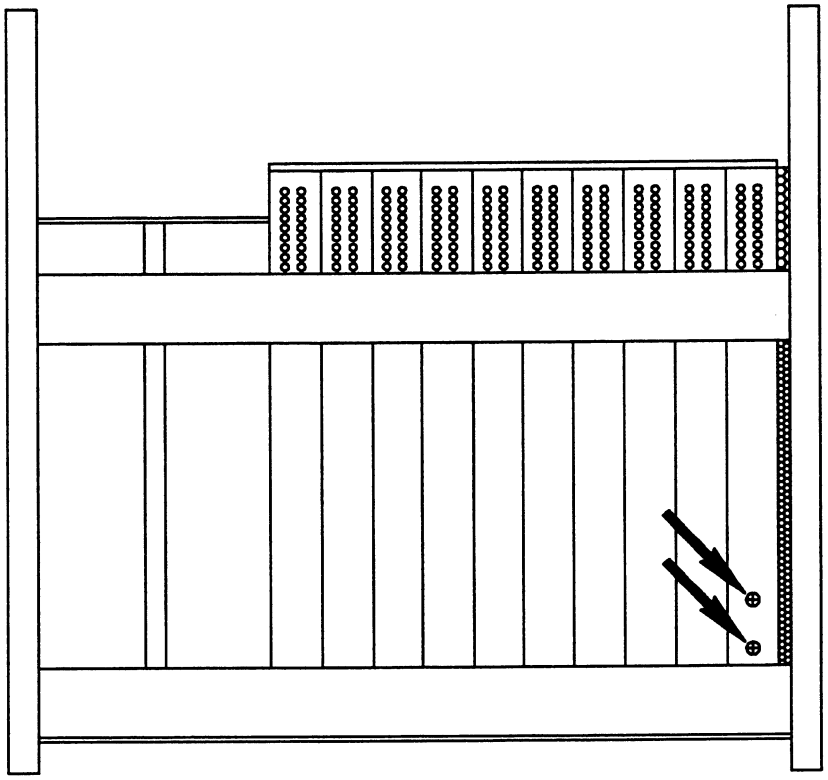

Fig. 3.6 - Removing the Output Amplifier

3.5.2 Analog Motherboard

To remove the Analog Motherboard, first remove the entire Front Panel (see section 3.2). Disconnect the 2 flat cables connecting the Digital Section and the Analog Section by unscrewing the 2 screws on one of the sections for each cable. Unscrew the 32 screws holding the motherboard and pull it out.

3.6 Digital Section

3.6.1 CPU

To remove the CPU you unscrew the 6 screws shown in Fig. 3.7. Insert a flatbladed screwdriver into the slot between the CPU and the chassis of the RE 125 and remove the CPU.

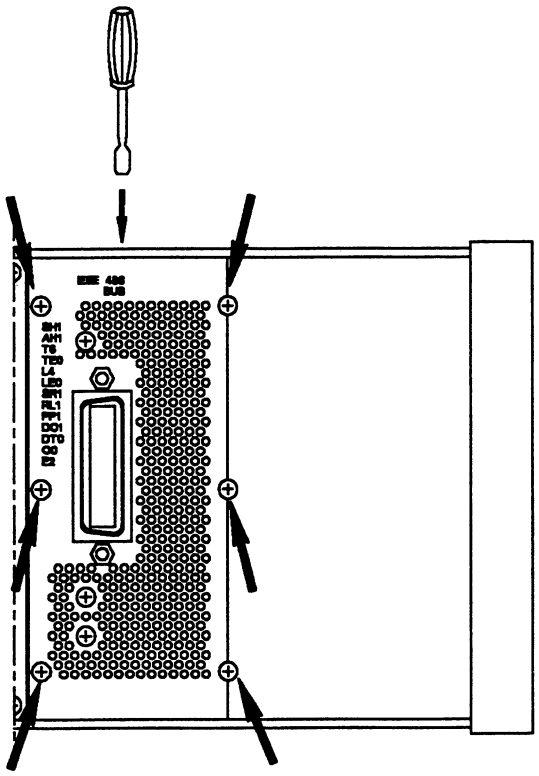

Fig. 3.7 - Removing the CPU

3.6.2 Audio Generator Digital Board

Remove the CPU as explained in section 3.6.1 and remove the Audio Generator Digital board.

3.6.3 Switch Mode Power Supply (SMPS)

First unscrew the 3 screws holding the top plate and remove it.

N O T E Remove the four mounting screws under the top plate (see Fig. 3.8).

Then unscrew the 6 screws shown in Fig. 3.9.

Insert a flatbladed screwdriver into the slot between the SMPS and the chassis of the RE 125 and remove the Switch Mode Power Supply.

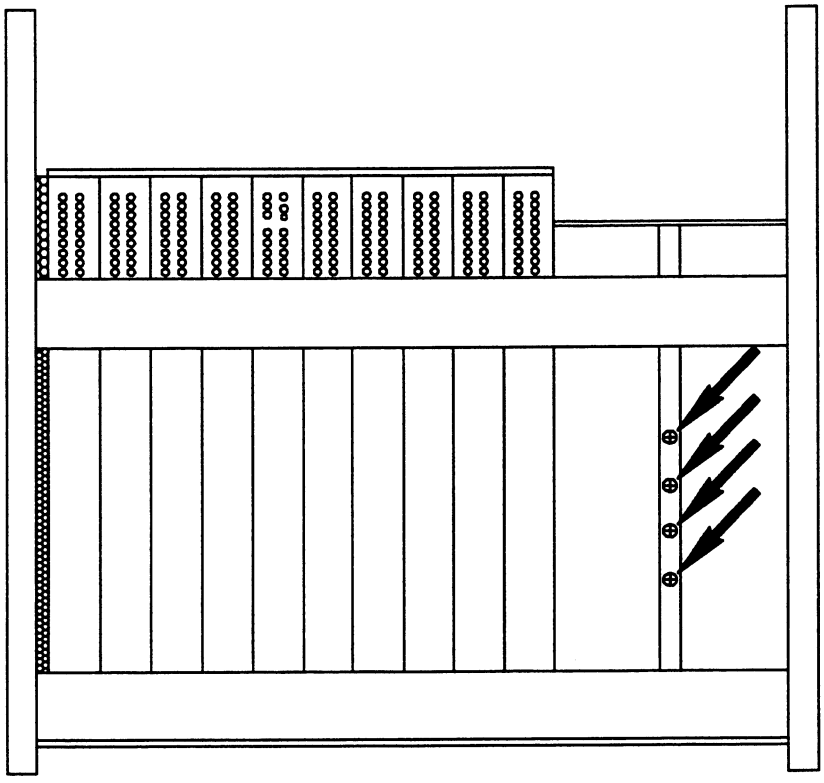

Fig. 3.8 - Removing SMPS Mounting Screws

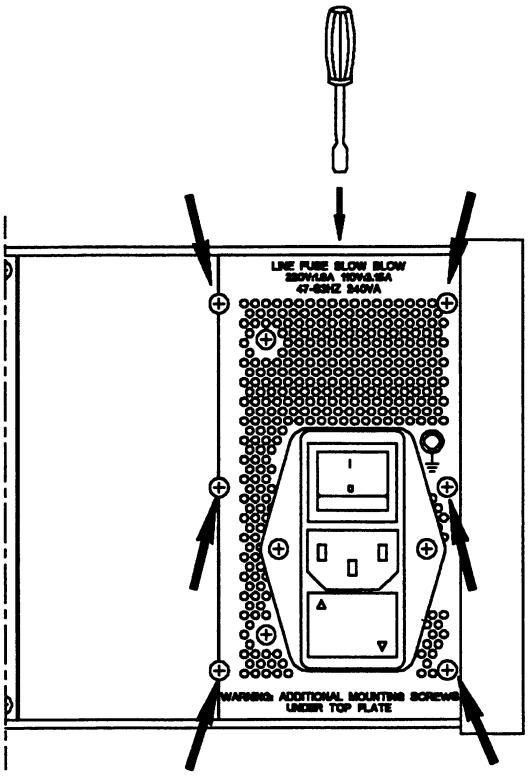

Fig. 3.9 - Removing The SMPS

3.6.4 Digital Motherboard and Audio Clock Board

To gain access to the Digital Motherboard and the Audio Clock board remove the entire Front Panel as described in section 3.2 and the top and bottom plates as described in section 3.1.

Disconnect the 2 flat cables connecting the Digital Section and the Analog Section by unscrewing the 2 screws on one of the sections for each cable (see section 3.5.2).

Remove the 8 screws holding the cover plate.

Now you may remove the Digital Motherboard and the Audio Clock board together with the extrusion slice where the voltage regulators are mounted.

The Audio Clock board is mounted on the cover plate. To remove it, unscrew the 5 screws, loosen the 4 hexagonal screws holding the Sub-D connectors mounted in the cover plate and unscrew the 2 screws holding the voltage regulators. Take care not to damage the insulation washers.

This page is intentionally left blank.

4. VERIFICATION AND MAINTENANCE

4.1 Performance Check

The procedures in this section test the electrical performance of the RE 125, using the specifications in section 25 as the performance standards. The performance tests given in this section are suitable for incoming inspection, troubleshooting, verification or preventive maintenance.

Section 4.2 lists the equipment required for the performance tests.

Before you test the instrument, its operating temperature must be allowed to stabilize by leaving it turned on for at least 1 hour.

4.2 Required Test Equipment

Instrument	Critical Specifications	Recomm. Model
Power Meter	Impedance: 50 Ω Frequency range: 0.1 to 250 MHz	R&S URV5
Spectrum Analyzer	Frequency Range: 0.1 to 1000 MHz, bandwidth < 10 Hz, sensitivity > 80 dB below 1.5 Vrms	HP 8591A
Modulation Analyzer AM/FM/PM	Frequency Range: 1 to 250 MHz	R&S FMAB
Distortion Analyzer	THD < -110 dB	RE 201
Multimeter AC/DC	50 Hz to 100 kHz. Accuracy: 0.2 %	Fluke 45
AC Voltmeter	50 Hz to 100 kHz	Sennheiser UPM 550-1
Stereo Generator	Stereo separation > 65 dB at 1 kHz	FM Stereo Gen. Option or RE 501
Oscilloscope	Capability of 40 dB overdrive without distortion of zero line and a sensitivity of 5 mV/div.	ADVANCE OS3000
Frequency Counter	Frequency range 1 to 250 MHz	HP 5316A
AF Generator	50 Hz to 100 kHz. Level accuracy ±0.5 %	B&O TG8
RF Generator	Frequency range 1 to 250 MHz	RE 125/RE 122
C-QUAM Demodulator	L/R separation >47 dB	

Table 4.1 - Required Test Equipment

4.3 Special Adjustment Points

Fig. 4.1 shows the adjustment points which are located in the analog section of the RE 125.

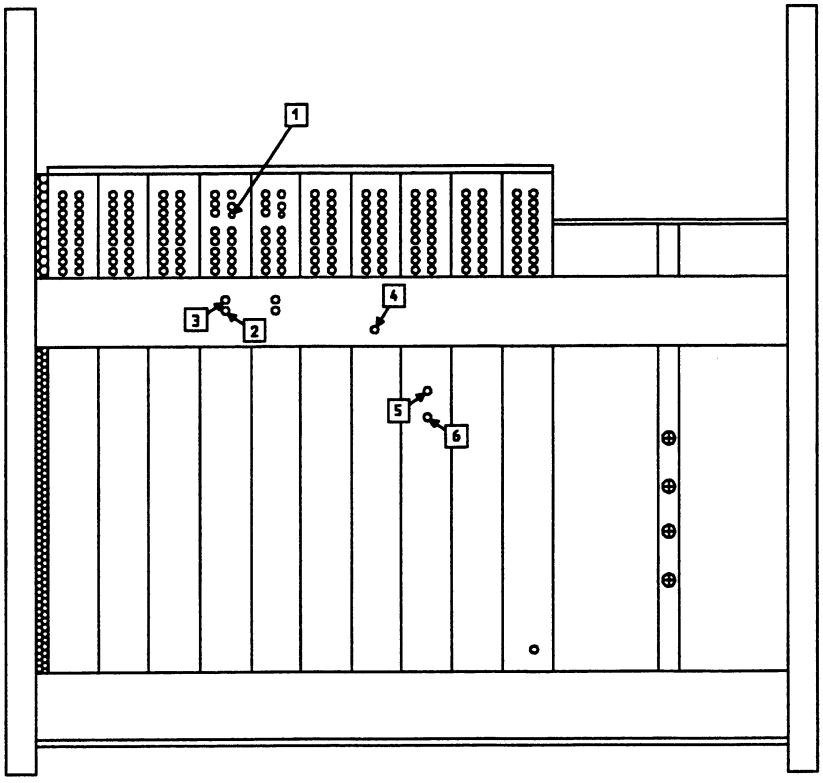

Fig. 4.1 - Adjustment Points on the Top of the RE 125

The adjustment points are listed below:

1. Adjustment point R100, FM deviation, FM Modulator
2. Adjustment point R112, L/R separation, FM Modulator
3. Adjustment point R121, FM distortion, FM Modulator
4. Adjustment point R314, Reference frequency, Reference/Modulation board
5. Adjustment point R66, 38 kHz residual, FM Stereo Generator option
6. Adjustment point R77, 114 kHz residual, FM Stereo Generator option

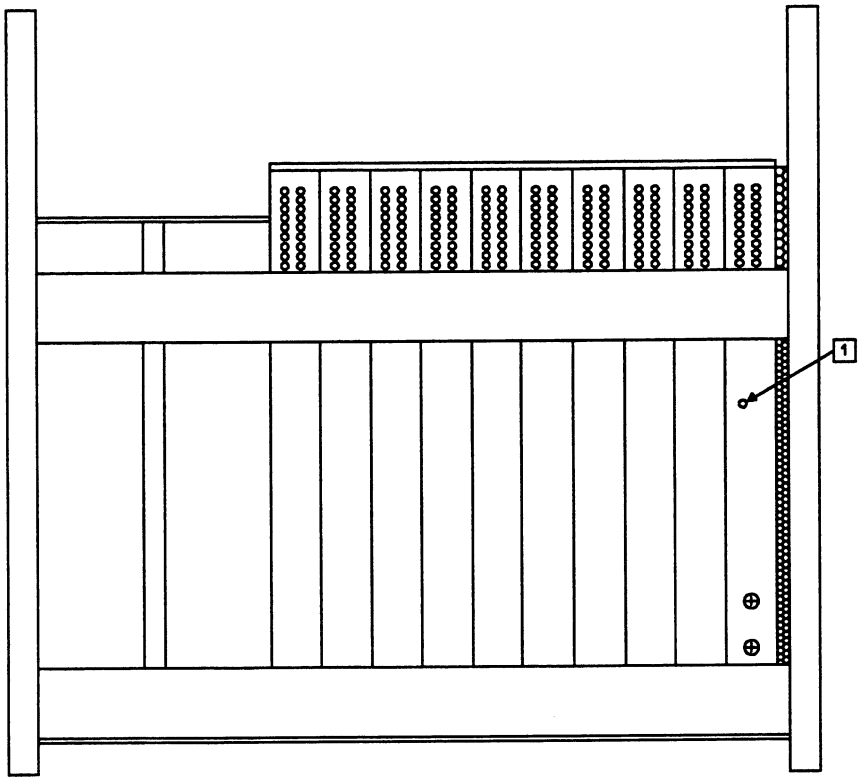

Fig. 4.2 - Adjustment Points on the Bottom of the RE 125

The adjustment points are listed below:

1. Adjustment point R152, L+R time delay, Output Amplifier

4.4 Maintenance of Air Filters

Air filters are located at the rear of the top and bottom plates. Each of the filters can be removed by unscrewing the 4 screws.

N O T E These filters should be cleaned regularly. Otherwise the over-temperature surveillance circuit may cause the RE 125 to shut down.

4.5 RF Output Frequency

Equipment

Frequency Counter

Specification

Internal Frequency Reference accuracy ±1 ppm.

Procedure

Connect the Frequency Counter to the RF OUT connector of the RE 125.

Set the RE 125 controls as follows:

RF frequency	100.000000 MHz
RF level	-6 dBm
Modulation	CW

Measure the output frequency using the Frequency Counter.

Permissible error ±100 Hz.

Adjustments

See section 11.2.1 Reference Oscillator Frequency.

Also check the output frequency at the following frequency settings to ensure proper operation of the instrument:

0.1 MHz	45 MHz	119 MHz	180 MHz
2 MHz	69 MHz	120 MHz	209 MHz
29 MHz	70 MHz	149 MHz	210 MHz
30 MHz	89 MHz	150 MHz	250 MHz
44 MHz	90 MHz	179 MHz	

4.6 RF Output Level Test

Equipment

Power Meter

Specification

Absolute accuracy	±1.0 dB
Flatness	±0.5 dB

Procedure

Connect the Power Meter to the RF OUT connector on the RE 125.

Set the RE 125 controls as follows:

RF frequency	0.1 MHz
RF level	0 dBm
Modulation	CW

The output level is measured using the Power Meter.

Permissible error ±0.5 dB.

Check the variation of the output level at the following frequencies:

0.1 MHz	45 MHz	119 MHz	180 MHz
2 MHz	69 MHz	120 MHz	209 MHz
29 MHz	70 MHz	149 MHz	210 MHz
30 MHz	89 MHz	150 MHz	250 MHz
44 MHz	90 MHz	179 MHz	

Permissible error ±0.5 dB.

Adjustments

See sections 14.2.3 and 14.2.4.

4.7 RF Harmonics Test

Equipment

Spectrum Analyzer HP 8591A.

Connect the Spectrum Analyzer to the RF OUT connector of the RE 125.

The harmonics of the RF frequency are measured using the Spectrum Analyzer.

Permissible level:	Each of the harmonics should be at least 38 dB below the carrier level for frequencies below 70 MHz, and at least 35 dB below the carrier level for frequencies above 70 MHz.

Adjustments

No relevant adjustments.

4.8 Amplitude Modulation Tests

Equipment

Modulation Analyzer
Oscilloscope
AC DVM
AF generator
Distortion analyzer

Connect the RF OUT connector of the RE 125 to the RF input connector of the Modulation Analyzer.

4.8.1 AM Depth

Specification

AM Depth accuracy	
100 kHz to 2 MHz	±2 % of setting
2 to 250 MHz	±5 % of setting

Procedure

Set the RE 125 controls as follows:

Modulation	AM, INT or EXT MONO, 1000 Hz

The AM depth is detected and measured using the Modulation Analyzer.

RF frequency setting	AM depth setting	Max. error measured
1 MHz	30 %	±2 %
1 MHz	80 %	±2 %
100 MHz	30 %	±5 %
100 MHz	80 %	±5 %

Adjustments

See section 11.2.4 and 14.2.2.

4.8.2 AM Frequency Response

Specification

AM Bandwidth
100 kHz to 2 MHz 20 Hz - 25 kHz ±0.1 dB

Procedure

Connect the AF Generator to the EXT AM connector on the RE 125.

Set the RE 125 controls as follows:

RF frequency	1 MHz
RF level	0 dBm
Modulation	AM, EXT MONO

Set the AF Generator controls as follows:

AF level	0.707 Vrms

Set the Modulation Analyzer controls as follows:

Function	AM

The output frequency of the AF Generator is varied from 20 Hz to 25 kHz.

The AM level is measured using the Modulation Analyzer.

Permissible error ±0.1 dB.

Adjustments

No relevant adjustments.

4.8.3 AM Distortion

Specification

AM Distortion	
100 kHz to 2 MHz	< 0.1 % THD, 30 % AM, 1 kHz
	< 0.15 % THD, 50 % AM, 1 kHz
	< 0.2 % THD, 80 % AM, 1 kHz
2 to 250 MHz	< 0.15 % THD, 30 % AM, 1 kHz
	< 0.2 % THD, 50 % AM, 1 kHz
	< 0.4 % THD, 80 % AM, 1 kHz

Procedure

Connect the Distortion analyzer to the AF output of the Modulation Analyzer.

Set the RE 125 controls as follows:

Modulation	AM, INT or EXT Mono, 1000 Hz.

The AM distortion is measured using the Modulation Analyzer.

RF frequency setting	AM depth setting	Max. THD measured
1 MHz	30 %	0.1 %
1 MHz	50 %	0.15 %
1 MHz	80 %	0.2 %
10 MHz	30 %	0.15 %
10 MHz	50 %	0.2 %
10 MHz	80 %	0.4 %

Adjustments

No relevant adjustments.

4.8.4 Residual AM

Specification

AM S/N Ratio	> 80 dB, 100 % AM, 20 Hz to 10 kHz bandwidth

Procedure

Set the RE 125 controls as follows:

Modulation	CW

Set the Modulation Analyzer controls as follows:

Function	AM
Filters	10 Hz high-pass 15 kHz low-pass

The residual AM is measured using the Modulation Analyzer.

RF frequency setting	Max. residual AM measured
1 MHz	0.01 %
10 MHz	0.01 %

Adjustments

No relevant adjustments.

4.8.5 Incidental FM

Specification

Incidental FM	
0.1 to 2 MHz	< 3 Hz peak, 30 % AM, 1 kHz
2 to 250 MHz	< 50 Hz peak, 30 % AM, 1 kHz

Procedure

Set the RE 125 controls as follows:

RF frequency	10 MHz and 1 MHz
Modulation	AM, INT or EXT Mono, 1000 Hz, 30 %

Set the Modulation Analyzer as follows:

Function	FM
Filters	10 Hz high-pass
	15 kHz low-pass

The incidental FM is measured using the Modulation Analyzer.

Permissible values:

RF frequency setting	Max. incidental FM measured
1 MHz	3 Hz peak
10 MHz	50 Hz peak

Adjustments

No relevant adjustments.

4.8.6 Incidental PM

Specification

Incidental PM 100 kHz to 2 MHz	< 0.5×10^{-3} rad rms, 30 % AM, 1 kHz

Procedure

Set the RE 125 controls as follows:

RF frequency	1 MHz
Modulation	AM, INT or EXT Mono, 1000 Hz, 30 %

Set the Modulation Analyzer as follows:

Function	PM
Filters	10 Hz high-pass 15 kHz low-pass

The incidental PM is measured using the Modulation Analyzer.

Permissible value 0.5×10^{-3} rad rms.

Adjustments

See section 14.2.5.

4.9 Measurement of AM Stereo L/R Separation

This test must be made if the AM Stereo, Motorola C-QUAM Modulator option is installed.

Equipment

AM Stereo demodulator
AC Voltmeter

Specification

Stereo Separation	
L = 30 %, R = 0 %	> 45 dB, 1 kHz
	> 40 dB, 20 Hz to 10 kHz

Procedure

This test is difficult to perform because of the performance requirements needed from the stereo demodulator. The result of the L/R separation measurements depends on the intrinsic stereo crosstalk caused by the stereo demodulator used.

Connect the RF OUT of the RE 125 to the Modulation Analyzer.

Set the RE 125 controls as follows:

RF frequency	450 kHz
RF level	0 dBm
Modulation	AM, INT or EXT Stereo
Mod. level	L = 30 %, R = 0 %
Pilot level	0 %

Measure the R and L output levels from the stereo demodulator and check that the separation is larger than 45 dB.

Repeat the measurement with the following setting:

Mod. level	L = 0 %, R = 30 %

Adjustments

See section 20.2.

4.10 Frequency Modulation Tests

Equipment

Modulation Analyzer
AC Voltmeter
Distortion Analyzer
AF Generator

Connect the RF OUT connector of the RE 125 to the RF input connector of the Modulation Analyzer.

4.10.1 FM Deviation Accuracy Versus RF Frequency

Specification

FM Deviation accuracy	±2 %

Procedure

The FM deviation is measured using the Modulation Analyzer.

RF frequency setting	FM deviation setting	Max. error measured
1 MHz	10 kHz	±2 %
10 MHz	80 kHz	±2 %
40 MHz	80 kHz	±2 %
60 MHz	80 kHz	±2 %
100 MHz	80 kHz	±2 %

Adjustments

See section 11.2.5.

4.10.2 Deviation Accuracy Versus FM Deviation

Specification

FM Deviation accuracy	
2 to 120 MHz	±2 % of setting
100 kHz to 250 MHz	±5 % of setting

Procedure

Set the RE 125 controls as follows:

RF frequency	100 MHz
Modulation	FM, INT 1000

The FM deviation is measured using the Modulation Analyzer.

FM deviation setting	Max. error measured
1 kHz	2 % of setting
10 kHz	2 % of setting
100 kHz	2 % of setting
250 kHz	2 % of setting

Adjustments

No relevant adjustments.

4.10.3 External RDS/MPX Input

Specification

Sensitivity 1 Vp ±2 % for 100 kHz deviation.

Procedure

Connect the AF Generator to the FM MONO connector on the RE 125.

Set the RE 125 controls as follows:

RF frequency	100 MHz
RF level	0 dBm
Modulation	FM, EXT Stereo or Mono, Modulation level 0 %

Set the AF Generator controls as follows:

AF level	0.707 Vrms
Frequency	1 kHz

Set the Modulation Analyzer controls as follows:

Function	FM

The FM deviation is measured using the Modulation Analyzer.

Permissible error ±2 %.

Adjustments

See section 11.2.5.

4.10.4 FM Distortion

Specification

FM Distortion	
100 kHz to 2 MHz	< 0.03 % THD, 10 kHz deviation, 1 kHz
2 to 250 MHz	< 0.01 % THD, 75 kHz deviation, 1 kHz

Procedure

This test is difficult to perform with the recommended test instruments. The result of the distortion measurements depends on the intrinsic distortion of the Modulation Analyzer used.

At the factory, special test instruments are used. The measurements are performed at carrier frequencies of 1 and 100 MHz. The FM deviation is set to ±10 and ±75 kHz.

The RF output from the RE 125 is demodulated by the Modulation Analyzer, and the FM distortion is measured using a Distortion Analyzer.

Permissible distortion:

RF frequency setting	FM deviation setting	Max. distortion measured
1 MHz	10 kHz	0.03 %
100 MHz	75 kHz	0.01 %

Adjustments

See section 12.2.

4.10.5 Residual FM

Specification

FM S/N Ratio	
2 to 120 MHz	> 80 dB, 75 kHz deviation, 20 Hz to 15 kHz bandwidth
	> 90 dB, 75 kHz deviation, 50 μs de-emphasis
	> 94 dB, 75 kHz deviation, 75 μs de-emphasis
100 kHz to 250 MHz	> 74 dB, 75 kHz deviation, 20 Hz to 15 kHz bandwidth

Procedure

Set the RE 125 controls as follows:

RF frequency	100 MHz
Modulation	CW

Set the Modulation Analyzer controls as follows:

Filters	30 Hz high-pass
	15 kHz low-pass
Detector	RMS

The Residual FM is measured using the Modulation Analyzer.

Permissible value 5 Hz (RMS value).

Adjustments

No relevant adjustments.

4.10.6 Incidental AM

Specification

Incidental AM	< 0.1 %, 100 kHz FM deviation, 1 kHz

Procedure

The incidental AM is measured using the Modulation Analyzer.

Set the RE 125 controls as follows:

RF frequency	100 MHz
RF level	0 dBm
Modulation	FM, INT or EXT Mono, 1000 Hz
FM deviation	100 kHz

Set the Modulation Analyzer controls as follows:

Function	AM
Detector	RMS
Filters	30 Hz high-pass
	15 kHz low-pass

Permissible Incidental AM 0.1 %.

N O T E The incidental AM measured by the Modulation Analyzer is specified to 0.1 % at 50 kHz FM deviation.

Adjustments

No relevant adjustments.

4.11 Measurement of FM Stereo L/R Separation

Equipment

FM Stereo Generator option or stand alone Stereo Generator
Oscilloscope
Modulation Analyzer
Overload Protection Circuit (described in section 4.11.1).

Specification

Stereo Separation	
10 to 12 MHz and 70 to 110 MHz	> 60 dB, 1 kHz
	> 50 dB, 300 Hz to 5 kHz
	> 40 dB, 40 Hz to 15 kHz

Procedure

This test is difficult to perform with the recommended test instruments. The result of the L/R separation measurements depends on the intrinsic stereo crosstalk caused by the Modulation Analyzer used. For the R&S FMAB Modulation Analyzer the stereo separation is specified to 56 dB at 1 kHz and 50 dB in the total AF band.

If you measure a stereo separation better than 56 dB at 1 kHz, then do not try to improve it further, since you might be compensating for an erroneous measurement. See section 12.2.

Connect the COMP connector on the Stereo Generator to the FM STEREO connector on the RE 125 or use the optional FM Stereo Generator.

Connect the EXT.SYNC. of the oscilloscope to the MOD. SOURCE on the stereo generator or L Out of the RE 125 if using the FM Stereo Generator option.

Connect the RF OUT of the RE 125 to the Modulation Analyzer.

Connect the AF output of the Modulation Analyzer to the Y-input of the oscilloscope, via the Overload Protection Circuit. The Overload Protection Circuit is described in section 4.11.1.

Set the RE 125 controls as follows:

RF frequency	100 MHz
RF level	0 dBm
Modulation	FM, INT or EXT Stereo

Set the stereo generator controls as follows:

Modulation frequency	1 kHz
L only	
Pilot Off	
Pre-emphasis Off	
Composite Mod. Level	±75 kHz deviation measured using the Modulation Analyzer.

Set the Modulation Analyzer controls as follows:

Function	FM
Detector	RMS
Filters	10 Hz high-pass 220 kHz low-pass

Set the Oscilloscope controls as follows:

Ext. trigger (trigger signal from stereo generator mod. source).
DC Mode.
Volt/cm a. 1 V/cm should give 8.2 Vpp (switch S1 open).
b. 10 mV/cm to read stereo separation (switch S1 closed).

See Fig. 4.3.

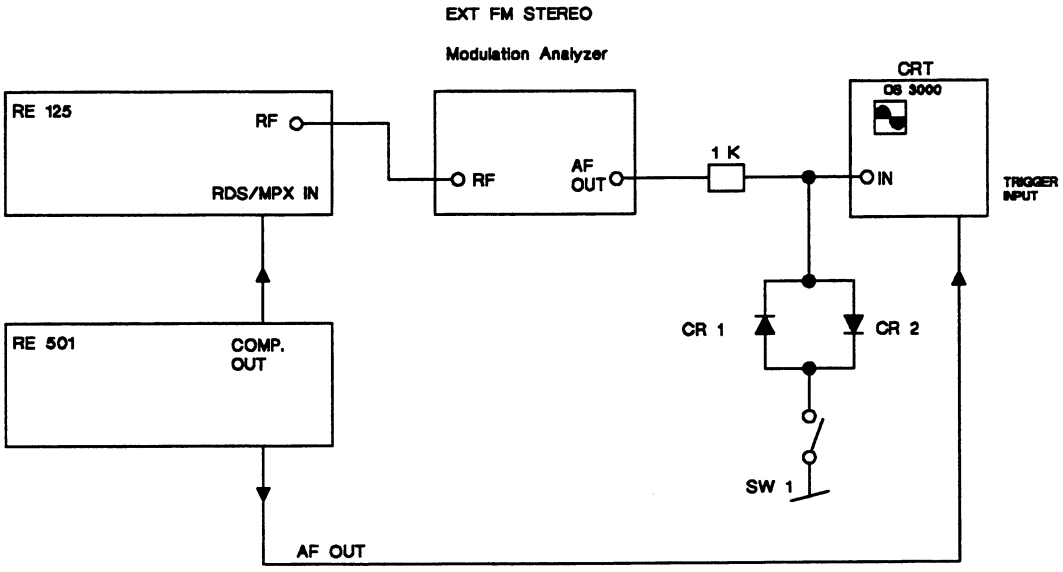

Fig. 4.3 - Stereo Separation Measurement Set-up

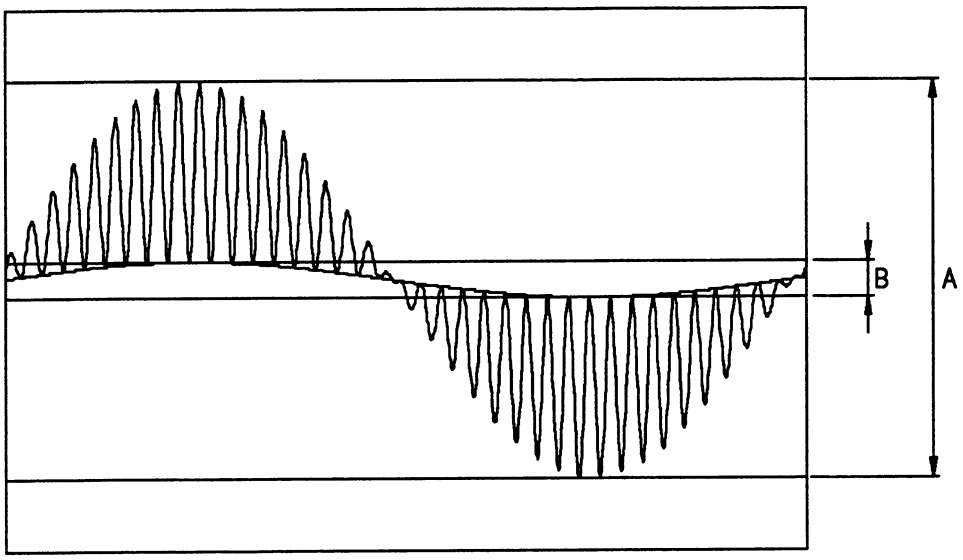

Fig. 4.4 - Oscilloscope Trace, FM Stereo Separation

FM Stereo Separation: 20 x log(a/b).

4.11.1 Overload Protection Circuit

To prevent the oscilloscope from overload, which can severely degrade the measurements, a simple circuit should be inserted between the Modulation Analyzer and the oscilloscope as shown in Fig. 4.3.

The diodes shown should be schottky diodes, for example Hewlett Packard type 5082-2812.

Adjustment

See section 12.2, Adjustments. If the FM Stereo Generator option is used see also section 22.2.

4.12 RDS/VRF Tests

Equipment

Modulation Analyzer
AC Voltmeter
Oscilloscope

4.12.1 RDS/VRF level

Specification

Maximum error ±2 % plus basic FM accuracy.

Procedure

Set the RE 125 controls as follows:

RF frequency	100 MHz
RF level	0 dBm
Modulation	FM, INT or EXT Stereo, 250 kHz mod. ref.
Mod. level	0 %
Pilot level	0 %
RDS level	6 %
RDS Signal mode	CW, 57.000 kHz

The deviation is measured using the Modulation Analyzer and must be 15.0 kHz.

Maximum error ±4 %.

Check the MPX OUT on the rear panel using the AC voltmeter.

The amplitude should be 0.3 Vpp ±2 %

Change the RDS CW frequency to 54.6 and 59.4 kHz and check that the voltage does not drop more than 0.2 dB from the 57 kHz value.

Adjustments

See section 23.2.

4.12.2 RDS/VRF phase

Specification

Maximum error ±2° relative to MPX pilot.

Procedure

Set the RE 125 controls as follows:

RF frequency	100 MHz
RF level	0 dBm
Modulation	FM, INT or EXT Stereo, 250 kHz mod. ref.
Mod. level	0 %
Pilot level	6 %
RDS level	6 %
RDS Signal mode	CW, 57.000 kHz
RDS Sync.	MPX

Check the MPX OUT on the rear panel using the oscilloscope.

Connect the oscilloscope to the MPX OUT BNC connector on the rear panel and check that the oscilloscope shows a symmetrical trace as shown in Fig. 4.5. When checking, expand the oscilloscope Y axis and use the Y offset to get as high a sensitivity as possible.

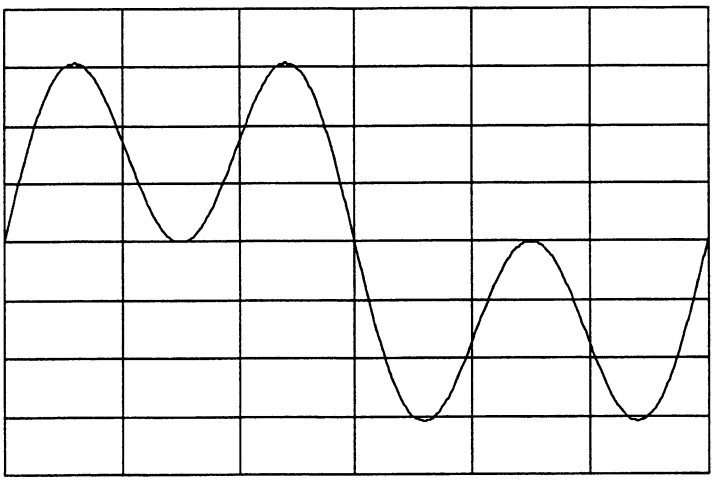

Fig. 4.5 - Oscilloscope Trace, RDS-Pilot Phase Check

Adjustments

See section 23.2.

4.13 Sweep

Equipment

Audio Generator option
Modulation Analyzer
Oscilloscope

Specification

Maximum error ±5 %.

Procedure

Set the RE 125 controls as follows:

Sweep time	10 ms
Waveform	Triangular

The sweep width is measured using the Modulation Analyzer.

RF frequency setting	Sweep width setting
1 MHz	±25 kHz
10 MHz	±125 kHz
60 MHz	±250 kHz
100 MHz	±500 kHz

Maximum error ±5 %.

Use the Oscilloscope to check the SWEEP OUT on the rear panel.
The amplitude should be 1 Vpp ±5 %

Adjustments

No relevant adjustments.

4.14 Internal Modulation Output

Equipment

Audio Generator option
Distortion Analyzer
Frequency Counter

Specification

Output level	1 Vp (±0.2 dB)
Distortion	0.01 %
Frequency accuracy	±25 ppm

Procedure

Set the RE 125 controls as follows:

Frequency	100 MHz
Modulation	AM, 30 %
Mod. source	INT, Mod freq. 400 Hz

Connect Distortion Analyzer to L Out and measure level,frequency, and THD.

Set Mod. freq.	1000 Hz

Repeat measurement of R Out signal by setting the RE 125 to FM modulation with 75 kHz deviation.

Adjustments

See sections 11.2 and 21.2.

4.15 Frequency Reference

Equipment

RF Generator
RF Millivoltmeter
Frequency Counter

Specification

REF. OUT. level	> 320 mVrms EMF
EXT. REF. level	150 - 1750 mVrms
EXT. REF. freq.	1, 2, 5 or 10 MHz
EXT. REF. freq. acc.	100 ppm

Procedure

Set the RE 125 controls as follows:

Frequency	100 MHz
Modulation	CW

Check REF. OUT. level using RF millivoltmeter.

Connect Frequency counter to REF. OUT.

Measure frequency.

Set RF generator to 10 MHz, CW and RF level to 0 dBm. Connect RF generator to EXT. REF. Frequency counter reading shall be 10 MHz +/- RF generator error.

Tune RF generator to 5, 2 and 1 MHz in turn. Frequency counter reading shall eventually be 10 MHz +/- RF generator error for each input frequency.

Adjustments

See section 11.2.1.

5. DIGITAL MOTHERBOARD

5.1 Circuit Description

The Digital Motherboard provides the interconnections between the boards in the Digital Section, that is, the Switch Mode Power Supply, the CPU Board, and the Digital Board of the Audio Generator option. Using the connector J4 there is also a connection to the Analog Section and to the Front Panel with the Keyboard/Display or Power Annunciator, via the Audio Clock board.

The Digital Motherboard holds LC filters for +5 V and +29 V to reduce the noise from the Power Supply.

The Digital Motherboard does not contain any active circuits.

5.2 Schematic Diagrams

The schematic diagram for the Digital Motherboard is located in the following. The diagram number is 985-421.

5.3 Component Locations

The component locations on the Digital Motherboard are shown in the following.

5.4 Parts List

A copy of the parts list from production documentation is located in the following. The code number of the assembled PCB is 902-054.

This page is intentionally left blank.

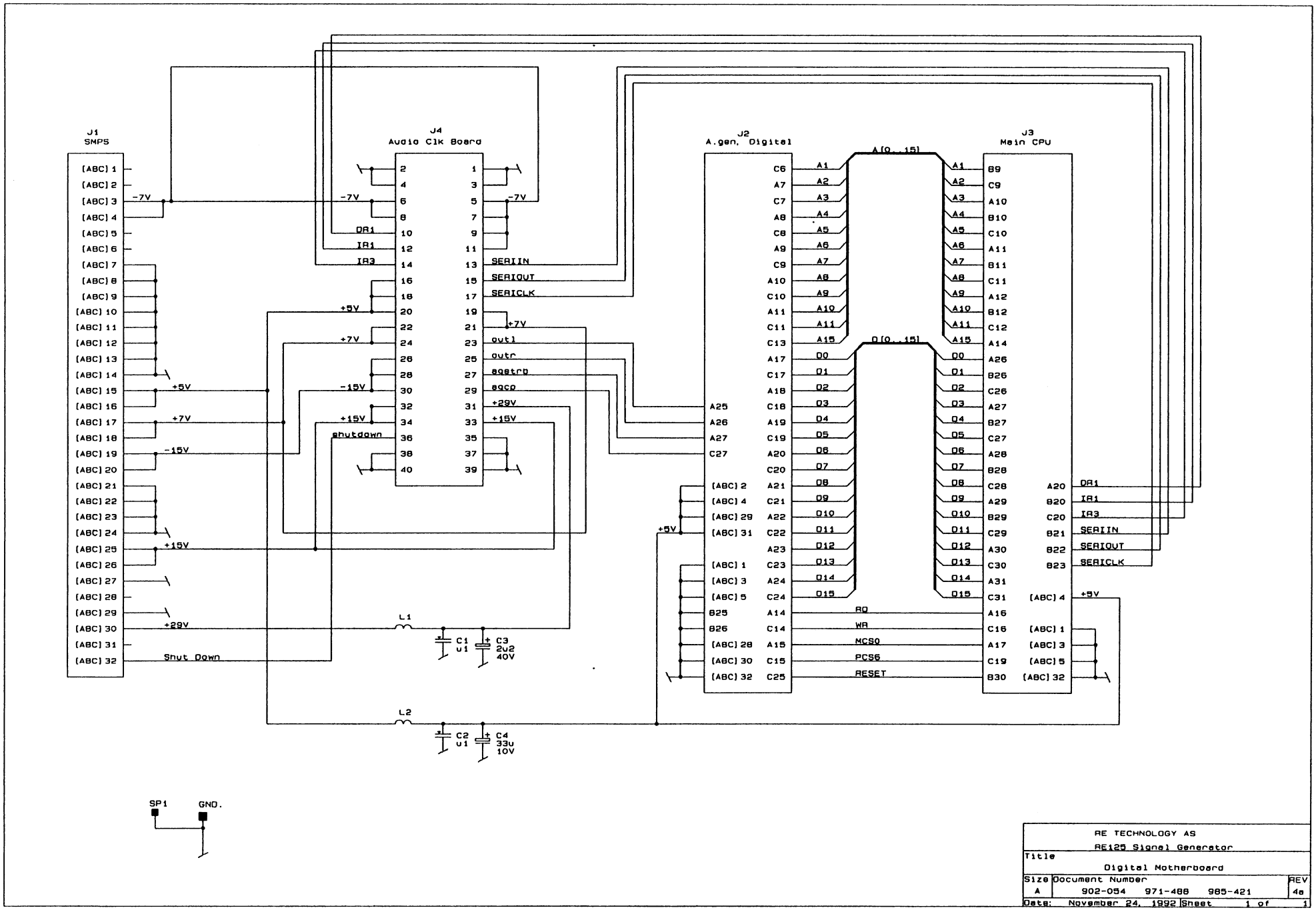

RE TECHNOLOGY AS

RE125 Signal Generator

Title: Digital Motherboard

Size	Document Number	REV
A	902-054 971-488 985-421	4a

Date: November 24, 1992 Sheet 1 of 1

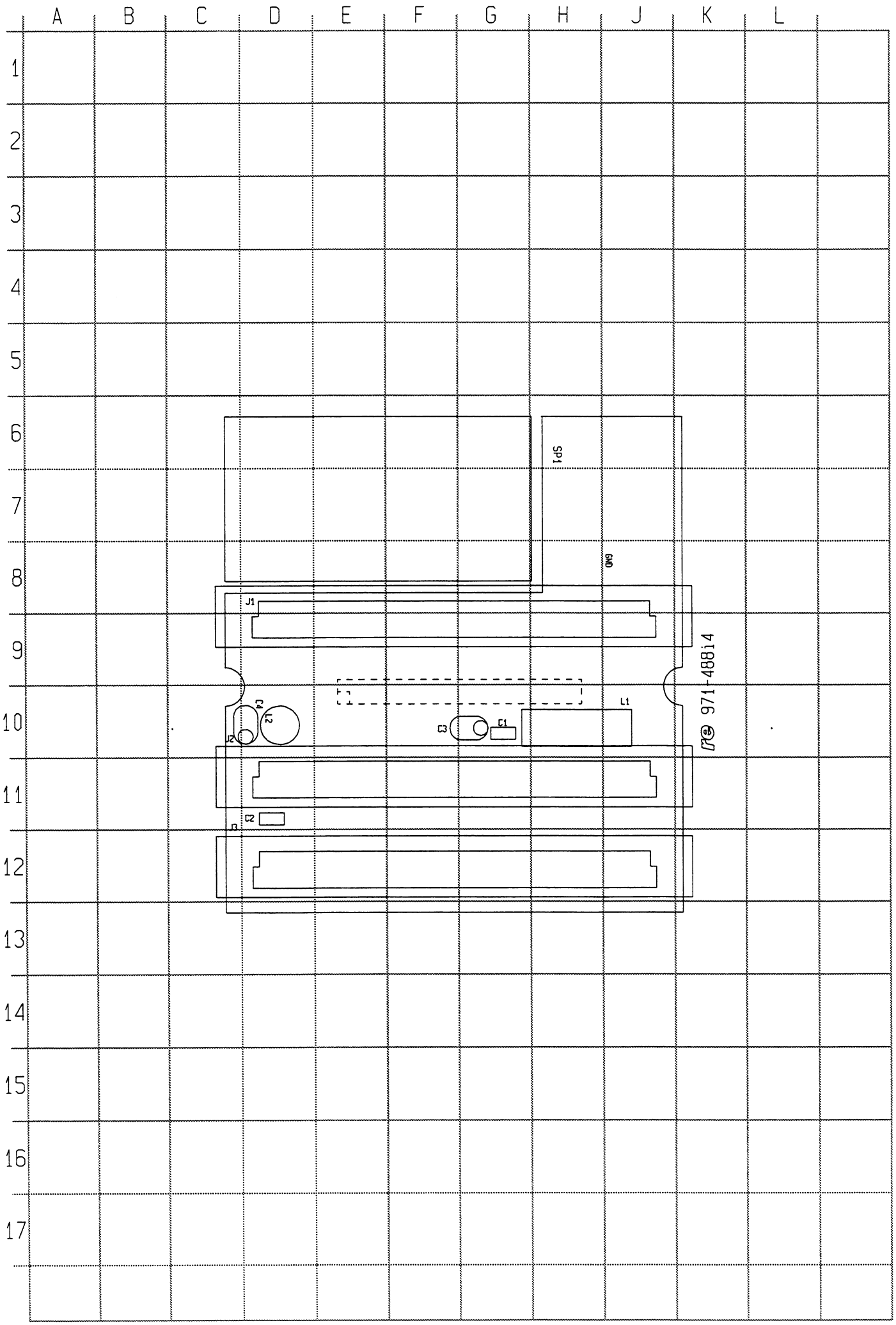
A
B
C
D
E
F
G
H
J
K
L
1
2
3
4
5
6
7
8
9
10
11
12
13
14
15
16
17
SP1
GND
J1
C4
L2
J2
C3
C1
L1
C2
J3
971-488i4

COMP	LOC	COMP	LOC	COMP	LOC	COMP	LOC	COMP	LOC	COMP	LOC	COMP	LOC	COMP	LOC	COMP	LOC	COMP	LOC	COMP	LOC	COMP	LOC
C1	G10																						
C2	D11																						
C3	F10																						
C4	D10																						
GND. 1	J8																						
J1	D8																						
J2	C10																						
J3	C12																						
L1	J10																						
L2	D10																						
SP1	H6																						

COMPONENT SIDE

Digital Motherboard (902054)

CAPACITORS

C 1	C Ceramic 100n 20% 50V	213401
C 2	C Ceramic 100n 20% 50V	213401
C 3	C Solid Aluminium 2u2 20% 40V Short Type	265112
C 4	C Solid Aluminium 33u 20% 10V Short Type	265105

CONNECTORS

J 1	DIN 41612 96 pol female straight, C class II	805925
J 2	DIN 41612 96 pol female straight, C class II	805925
J 3	DIN 41612 96 pol female straight, C class II	805925
J 4	Pin header 2x20 pol straight h:27mm	806112

CHOKES

L 1	Choke HF Mini 22U/10% 0.75A	703013
L 2	Choke 0.6uH For RE122 SMPS	703075

MISCELLANEOUS

	Tubular Rivet 2.5X5	060305
	PCB For RE125 Digital Motherboard	971488
GND1	Solder Terminal 0.1 O2	823303

6. AUDIO CLOCK BOARD

6.1 Circuit Description

The Audio Clock board provides the interconnections between the Digital Motherboard and the rest of the instrument. J1 and J2 connect to Analog Motherboard and J3 connects to the Front Panel with the Keyboard/Display or the Power annunciator board.

The Audio Clock board holds voltage regulators for ±5 V for the FM Stereo, RDS/VRF generator and the Analog board of the Audio Generator option.

The 12.8 MHz crystal oscillator and the PLD used for generating the 128 kHz sample rate and the 3.2 MHz data clock for the Audio Generator option, are also located on the Audio Clock board.

6.2 Schematic Diagrams

The schematic diagram for the Audio Clock board is located in the following. The diagram number is 985-420.

6.3 Component Locations

The component locations on the Digital Motherboard are shown in the following.

6.4 Parts List

A copy of the parts list from production documentation is located in the following. The code number of the assembled PCB is 902-053.

This page is intentionally left blank.

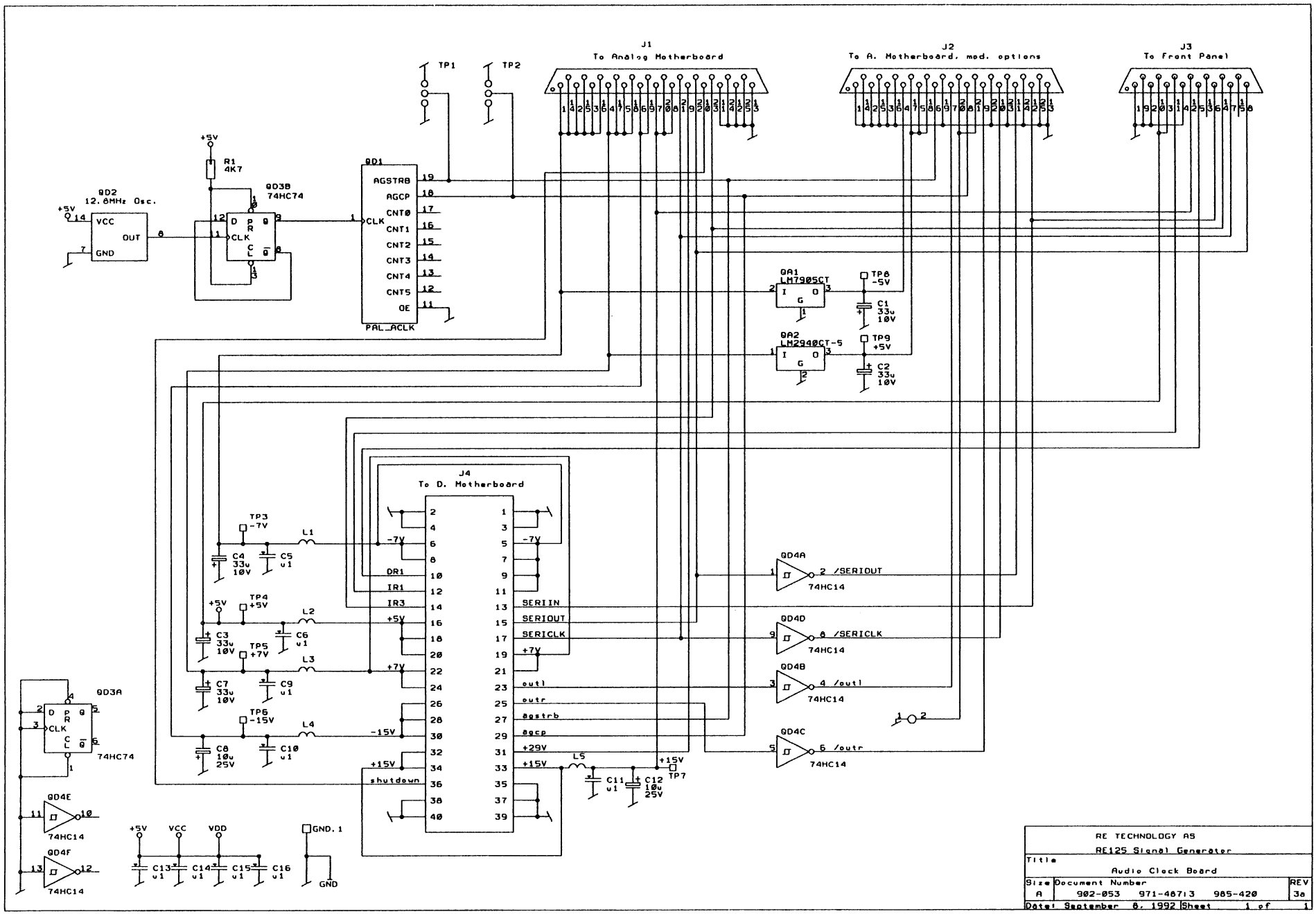

RE TECHNOLOGY AS			
RE125 Signal Generator			
Title	Audio Clock Board		
Size	Document Number		REV
A	902-053 971-46713 985-420		3a
Date: September 8, 1992	Sheet 1 of 1		

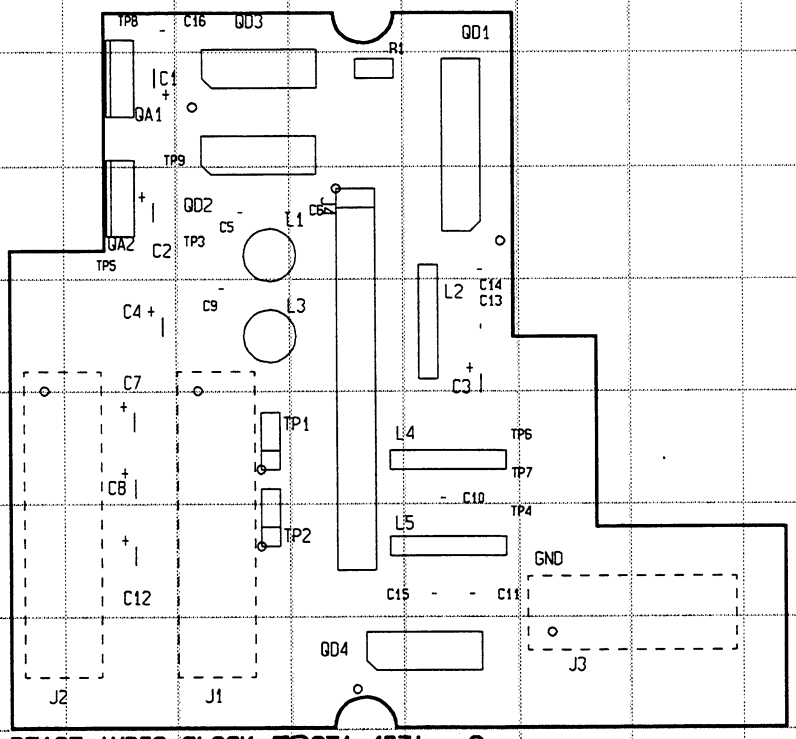

RE125 AUDIO CLOCK 971-487iss. 3

COMP	LOC	COMP	LOC	COMP	LOC	COMP	LOC	COMP	LOC	COMP	LOC	COMP	LOC	COMP	LOC	COMP	LOC	COMP	LOC	COMP	LOC	COMP	LOC
C1	E7																						
C2	D8																						
C3	G10																						
C4	D9																						
C5	E8																						
C6	F8																						
C7	D9																						
C8	D10																						
C9	E9																						
C10	G10																						
C11	G11																						
C12	D11																						
C13	G9																						
C14	G9																						
C15	F11																						
C16	E6																						
GND	H11																						
J1	E12																						
J2	C12																						
J3	H12																						
J4	F8																						
L1	E8																						
L2	G9																						
L3	E9																						
L4	G10																						
L5	F11																						
QA1	D7																						
QA2	D8																						
QD1	G6																						
QD2	E8																						
QD3	E6																						
QD4	F12																						
R1	F7																						
TP1	F10																						
TP2	F11																						
TP3	E8																						
TP4	G11																						
TP5	D8																						
TP6	G10																						
TP7	G10																						
TP8	D6																						
TP9	D7																						

COMPONENT SIDE

Audio Clock Board (902053)

CAPACITORS

C 1	C Solid Aluminium 33u 20% 10V Short Type	265105
C 2	C Solid Aluminium 33u 20% 10V Short Type	265105
C 3	C Solid Aluminium 33u 20% 10V Short Type	265105
C 4	C Solid Aluminium 33u 20% 10V Short Type	265105
C 5	C Ceramic 100n 20% 50V	213401
C 6	C Ceramic 100n 20% 50V	213401
C 7	C Solid Aluminium 33u 20% 10V Short Type	265105
C 8	C Solid Aluminium 10u 20% 25V Short Type	265110
C 9	C Ceramic 100n 20% 50V	213401
C 10	C Ceramic 100n 20% 50V	213401
C 11	C Ceramic 100n 20% 50V	213401
C 12	C Solid Aluminium 10u 20% 25V Short Type	265110
C 13	C Ceramic 100n 20% 50V	213401
C 14	C Ceramic 100n 20% 50V	213401
C 15	C Ceramic 100n 20% 50V	213401
C 16	C Ceramic 100n 20% 50V	213401

CONNECTORS

J 1	D-Sub 25 pol male straight for PCB, UN4-40 and filter 1000pF	806018
J 2	D-Sub 25 pol male straight for PCB, with UN4-40	805055
J 3	D-Sub 15 pol male straight for PCB, UN4-40 and filter 1000pF	806017
J 4	Socket 2x20 pol straight h:8.5mm	806111

CHOKES

L 1	Choke 0.6uH For RE122 SMPS	703075
L 2	Coil For RE122 SMPS	740231
L 3	Choke 0.6uH For RE122 SMPS	703075
L 4	Coil For RE122 SMPS	740231
L 5	Coil For RE122 SMPS	740231

INTEGRATED ANALOG CIRCUITS

QA 1	IC L7905CT - 5V regulator	364884
QA 2	IC LM2940T-5 L.dropout 5V Regulator	364883

INTEGRATED DIGITAL CIRCUITS

QD 1	Pal RE125 902-053 QD2 P16V8R	369359
QD 2	Hybrid Clock Oscillator TTL 12.8MHz 25ppm	910215
QD 3	IC 74HC74P dual d ff	364755
QD 4	IC 74HC14 Hex inv. Schmitt Trig	364800

RESISTORS

R 1	R Metal Film 4K70 5% 0.2W TC250	107447

TESTPOINTS

TP 1	Pin header 3 pol straight l:6.7mm with lock	805894
TP 2	Pin header 3 pol straight l:6.7mm with lock	805894

MISCELLANEOUS

	Hexagon Cylinder Screw M3x8	010308
	Nut Rectangular M3 for to220	035909
	Stay Bolt M3x25.4	039758
	Lock washer D3,2/5,5x0,45	046405
	D-Sub access, screw lock for chassis	805470
	Mounting Acc. for TO-220	816163
	Insulation Bushing F. TO-220	816214
	Coverplate For	933236
	PCB For RE125 Audio Clock Board	971487
	Labels For PCB With 72 Pcs Each Of Ark 48x7	980722
GND.1	Solder Terminal 0.1 O2	823303
QDS1	Socket DIL 20 pol, h:4.95 300mil	816184

7. ANALOG MOTHERBOARD

7.1 Circuit Description

The Analog Motherboard provides the interconnections between the ten boards in the Analog RF Section including the Analog option boards. The connectors J11 and J12 provide, via flat cables, the connection from the Analog Section to the Digital Section. J11 and J12 are 25-pole Sub-D connectors where J11 is filtered.

To avoid EMI from the Analog Section, the Analog Motherboard is a four-layer board holding the signals and the power tracks on the inner layers, and ground on the surface. All signals inside the Analog Motherboard are shielded from each other to minimize interference.

The 2 Mbit/s Serial Bus and power are routed to all the boards in the Analog Section.

The Analog Motherboard does not contain any active circuits.

7.2 Schematic Diagrams

The schematic diagram for the analog motherboard is located in the following. The diagram number is 985-422.

7.3 Component Locations

The component locations on the analog motherboard are shown in the following.

7.4 Parts List

A copy of the parts list from production documentation is located in the following. The code number of the assembled PCB is 902-055.

This page is intentionally left blank.

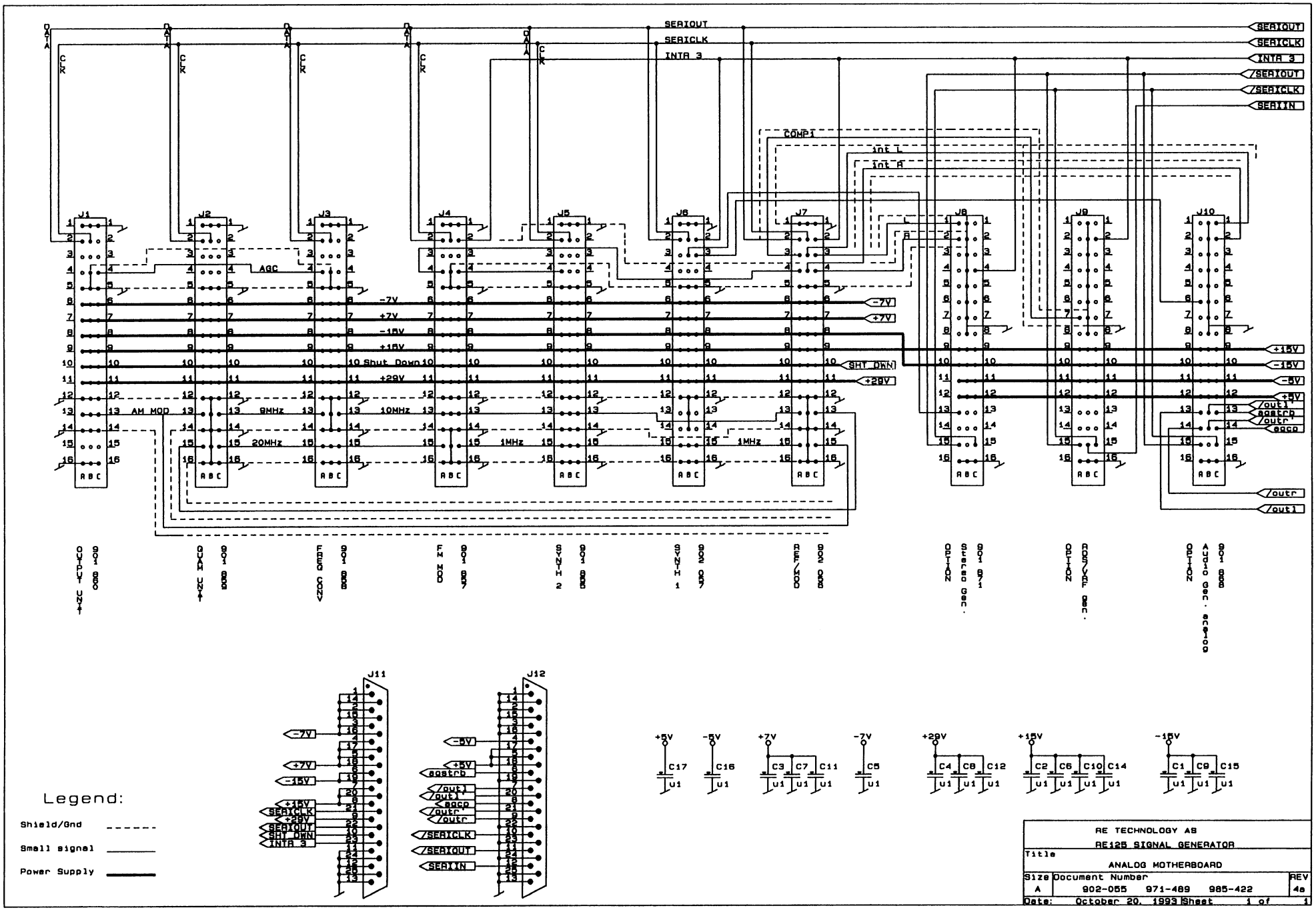
SERIOUT
SERICLK
INTR 3
/SERIOUT
/SERICLK
SERIIN
COMP1
int L
int R
AGC
-7V
+7V
-15V
+15V
Shut Down
+29V
SHT DWN
AM MOD
9MHz
10MHz
20MHz
1MHz
-5V
+5V
/out1
agctrb
/outr
agcp
J1
J2
J3
J4
J5
J6
J7
J8
J9
J10
J11
J12
OUTPUT UNIT 901 880
QUAD UNIT 901 883
FREQ CONV 901 885
FM MOD 901 887
SYNTH 2 901 886
SYNTH 1 902 887
RF/MOD 902 888
OPTION Stereo Gen. 901 871
OPTION AM/VCF Gen. 901 882
OPTION Audio Gen. ac9100 901 888
C17 C16 C3 C7 C11 C5 C4 C8 C12 C2 C6 C10 C14 C1 C9 C15
Legend:
Shield/Gnd
Small signal
Power Supply
RE TECHNOLOGY AS
RE125 SIGNAL GENERATOR
Title
ANALOG MOTHERBOARD
Size A
Document Number 902-055 971-489 985-422
REV 4a
Date: October 20, 1993 Sheet 1 of 1

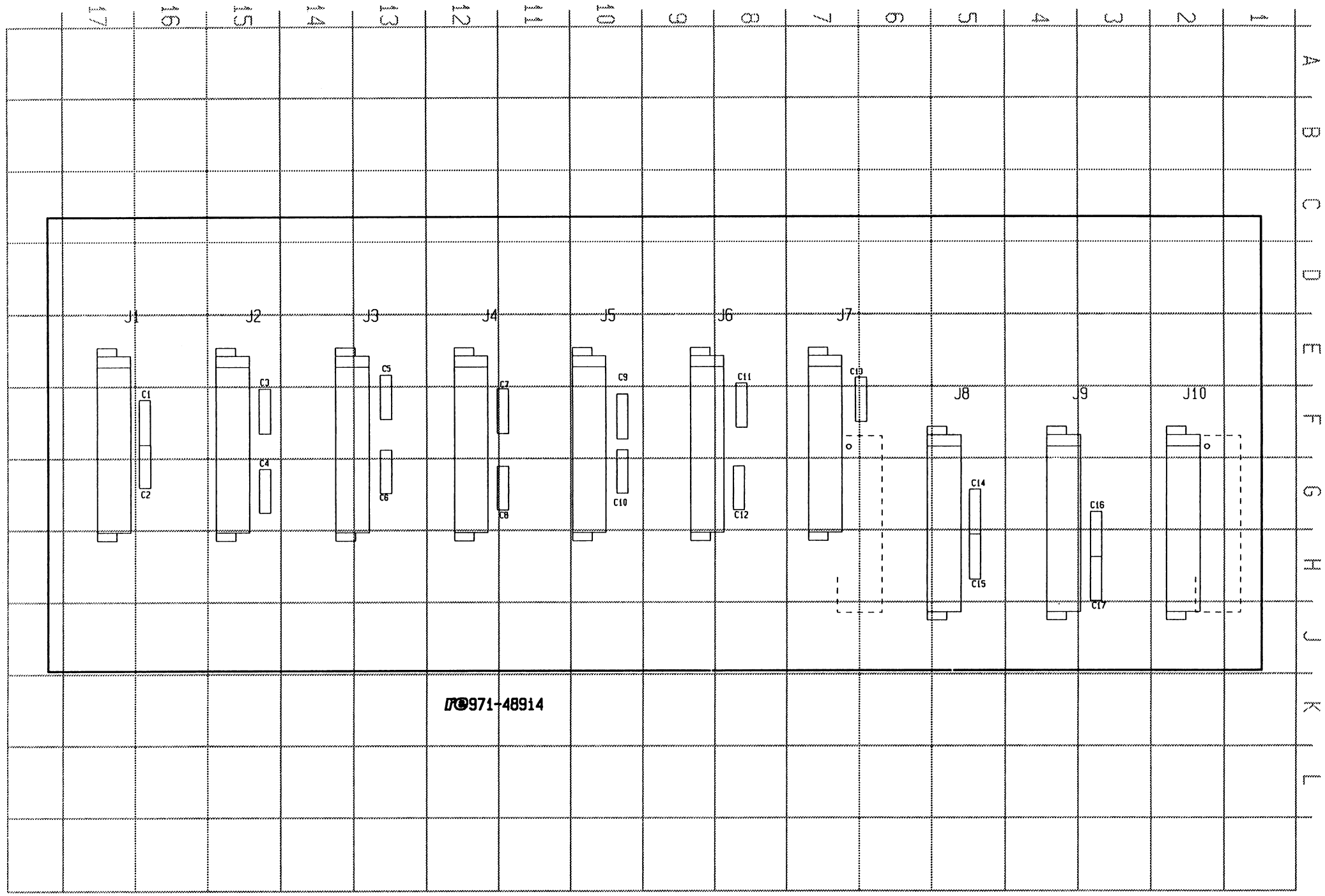
17
16
15
14
13
12
11
10
9
8
7
6
5
4
3
2
1
A
B
C
D
E
F
G
H
J
K
L
J1
J2
J3
J4
J5
J6
J7
J8
J9
J10
C1
C2
C3
C4
C5
C6
C7
C8
C9
C10
C11
C12
C13
C14
C15
C16
C17
IT®971-48914

COMP	LOC	COMP	LOC	COMP	LOC	COMP	LOC	COMP	LOC	COMP	LOC	COMP	LOC	COMP	LOC	COMP	LOC	COMP	LOC	COMP	LOC	COMP	LOC
C1	F16																						
C2	G16																						
C3	E15																						
C4	G15																						
C5	E13																						
C6	G13																						
C7	F11																						
C8	G11																						
C9	E10																						
C10	G10																						
C11	E8																						
C12	G8																						
C13	E6																						
C14	G5																						
C15	H5																						
C16	G3																						
C17	J3																						
J1	E17																						
J2	E15																						
J3	E13																						
J4	E12																						
J5	E10																						
J6	E8																						
J7	E7																						
J8	F5																						
J9	F4																						
J10	F2																						

COMPONENT SIDE

971-48914

Analog Motherboard (902055)

CAPACITORS

C 1	C Ceramic 100n 20% 50V	213400
C 2	C Ceramic 100n 20% 50V	213400
C 3	C Ceramic 100n 20% 50V	213400
C 4	C Ceramic 100n 20% 50V	213400
C 5	C Ceramic 100n 20% 50V	213400
C 6	C Ceramic 100n 20% 50V	213400
C 7	C Ceramic 100n 20% 50V	213400
C 8	C Ceramic 100n 20% 50V	213400
C 9	C Ceramic 100n 20% 50V	213400
C 10	C Ceramic 100n 20% 50V	213400
C 11	C Ceramic 100n 20% 50V	213400
C 12	C Ceramic 100n 20% 50V	213400
C 14	C Ceramic 100n 20% 50V	213400
C 15	C Ceramic 100n 20% 50V	213400
C 16	C Ceramic 100n 20% 50V	213400
C 17	C Ceramic 100n 20% 50V	213400

CONNECTORS

J 1	DIN 41612 48 pol female straight, C/2 class II	805959
J 2	DIN 41612 48 pol female straight, C/2 class II	805959
J 3	DIN 41612 48 pol female straight, C/2 class II	805959
J 4	DIN 41612 48 pol female straight, C/2 class II	805959
J 5	DIN 41612 48 pol female straight, C/2 class II	805959
J 6	DIN 41612 48 pol female straight, C/2 class II	805959
J 7	DIN 41612 48 pol female straight, C/2 class II	805959
J 8	DIN 41612 48 pol female straight, C/2 class II	805959
J 9	DIN 41612 48 pol female straight, C/2 class II	805959
J 10	DIN 41612 48 pol female straight, C/2 class II	805959
J 11	Socket 1 pol for D-Sub Conn.	816299
J 12	Socket 1 pol for D-Sub Conn.	816299

MISCELLANEOUS

Tubular rivet D2,5x6	060260
PCB For RE125 Analog Motherboard	971489

8. SMPS UNIT

8.1 Circuit Description

The SMPS unit consists of two circuit boards, a main board, and a driver board that is mounted perpendicular to the main board with soldered connections. Furthermore, there is a line input filter mounted on the rear panel. This filter includes a line switch, a fuse, and a line-voltage selector.

Fig. 8.1 shows the block diagram of the SMPS unit.

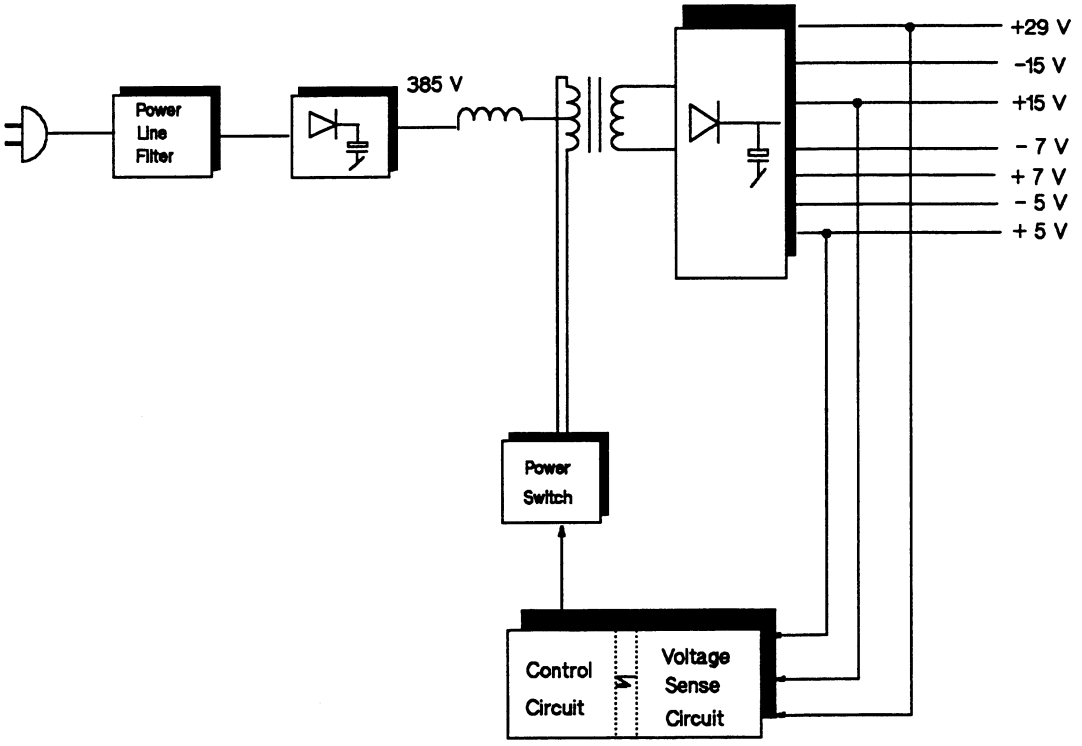

Fig. 8.1 - Block Diagram of the SMPS Unit

8.1.1 SMPS Main Board

On the main board the line voltage is rectified and filtered to a DC voltage of about 385 V. This DC voltage is used as input to a PWM step-down regulator consisting of Q3, CR13, and the inductor T3. The regulator output is DC-to-AC inverted by Q1 and Q2. The resulting stabilized AC voltage (100 V) is then transformed in T1, and finally fed to the various output rectifiers and filters. The drive signals for the transistors come from the Driver Board which in turn receives power and feedback signals from the Main Board. Galvanic isolation is achieved in the transformer.

N O T E A 3 A fuse has been placed in the 5 V output circuit. If a fault occurs, check this fuse (F1) which is soldered to the board.

8.1.2 SMPS Driver Board

The driver board includes a SMPS current mode controller, a flip-flop to generate drive signals to the power inverter, and over-voltage, under-voltage, and temperature surveillance circuits. Galvanic isolation is achieved using optocouplers. If an over-voltage or over-temperature fault occurs, a thyristor shuts down the power supply. Restart can only be effected when line power has been switched off for about 30 seconds.

8.2 Adjustments

W A R N I N G Whenever the SMPS unit is operated outside the enclosed compartment, the line power must be connected via a safety transformer. The protective ground connection of the instrument is via the rear panel of the SMPS. Therefore, if the SMPS unit is mounted on an extender board, it is mandatory that this connection is made using a wire.

Only adjustment of the +5 V output voltage should be attempted. This is done on the driver board and requires removal of the power supply from the compartment. See Figs. 3.8 and 3.9.

The required test equipment is a line safety transformer (1:1), an extender board (901-805), and a multimeter.

8.2.1 +5 V Output

1. Place the SMPS Unit on the extender board (901-805), and connect a voltmeter between +5 V output (J1-15c) and 5 V return (J1-11c).

2. Connect the power inlet via the safety transformer, and switch on the supply. Adjust the voltage reading to 5.00 V (±10 mV).

NOTE The supply should only be powered on for a few minutes if adequate cooling is not available.

WARNING **Dangerously High Voltages** exist on the Main Board.

8.3 Schematic Diagrams

The schematic diagrams for the SMPS Unit are located in the following. The diagram number for the SMPS Main Board is 985-294, and for the SMPS Switch Driver 985-295.

8.4 Component Locations

The component locations on the SMPS Unit are shown in the following.

8.5 Parts List

A copy of the parts list from production documentation is located in the following. The code number of the assembled PCBs are: 901-850 for the SMPS Main Board and 901-851 for the SMPS Switch Driver.

This page is intentionally left blank.

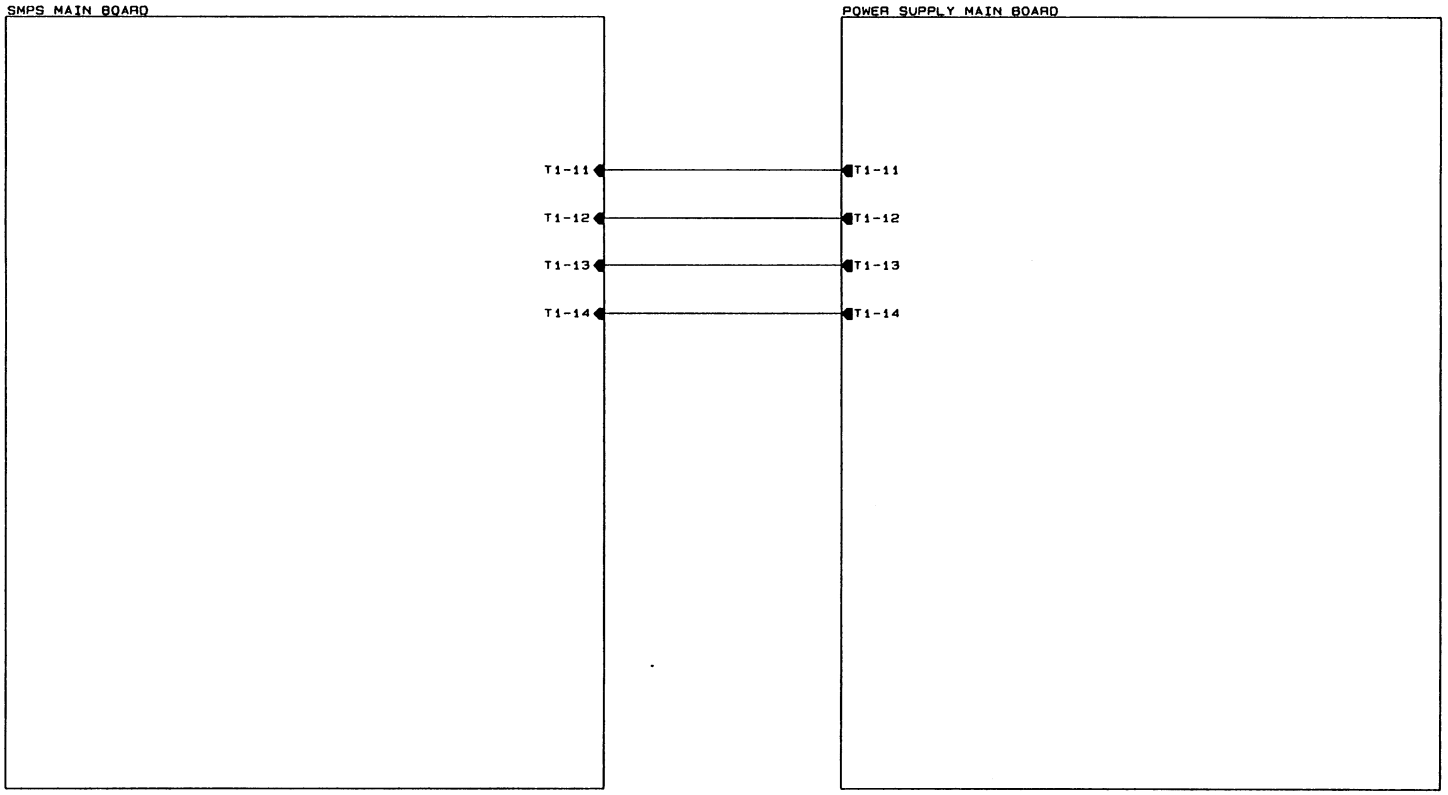

RE TECHNOLOGY AS RE122 SIGNAL GENERATOR POWER SUPPLY MAIN BOARD		
Title ROOT SHEET		
Size A	Document Number 901-850 971-396 985-294	REV 16a
Date: November 12, 1992	Sheet 1 of 3	

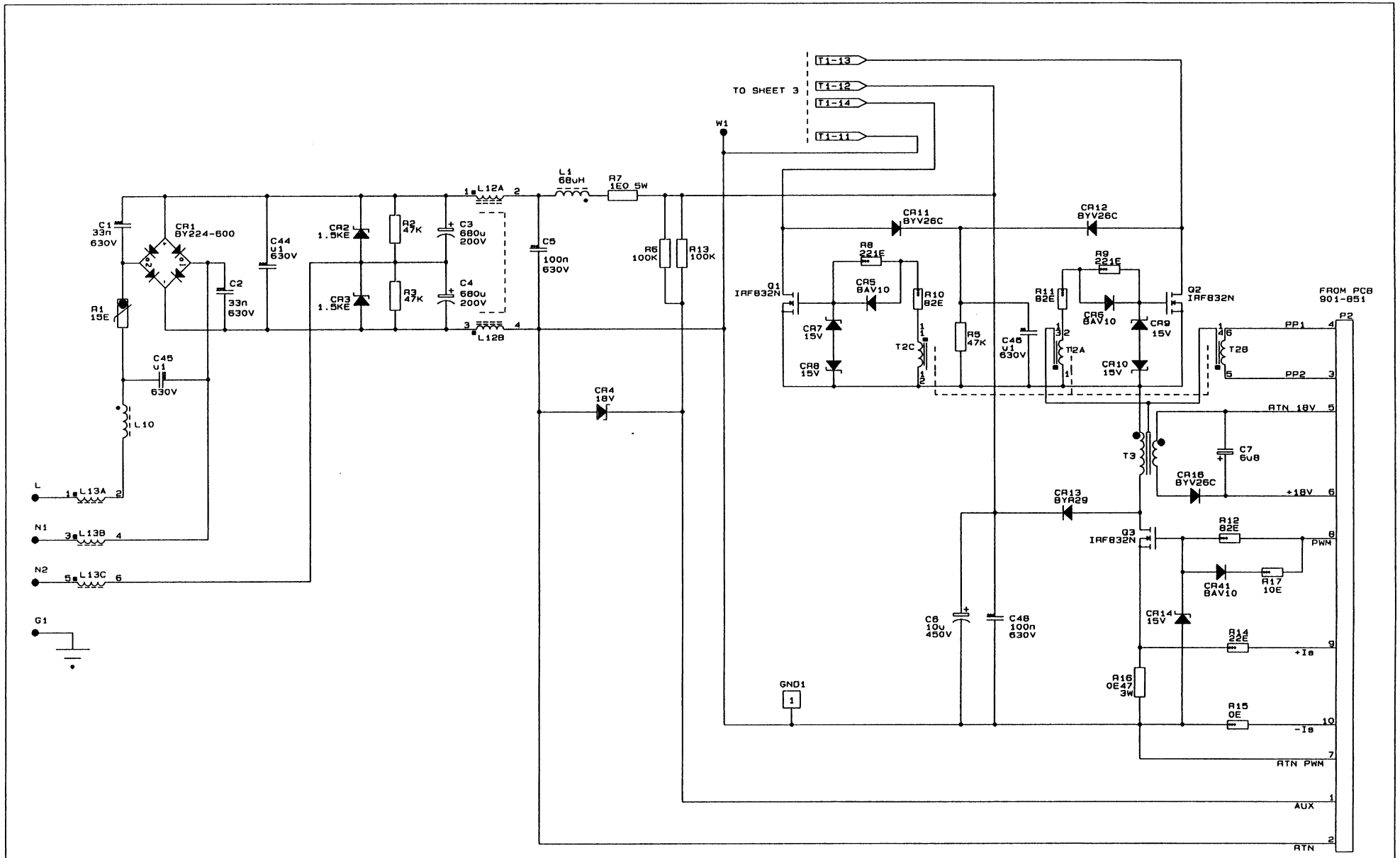

RE TECHNOLOGY AS			
RE122 SIGNAL GENERATOR			
Title	SMPS MAIN BOARD		
Size A	Document Number 901-850 971-396 985-294		REV 16a
Date: November 12, 1992	Sheet 2 of 3		

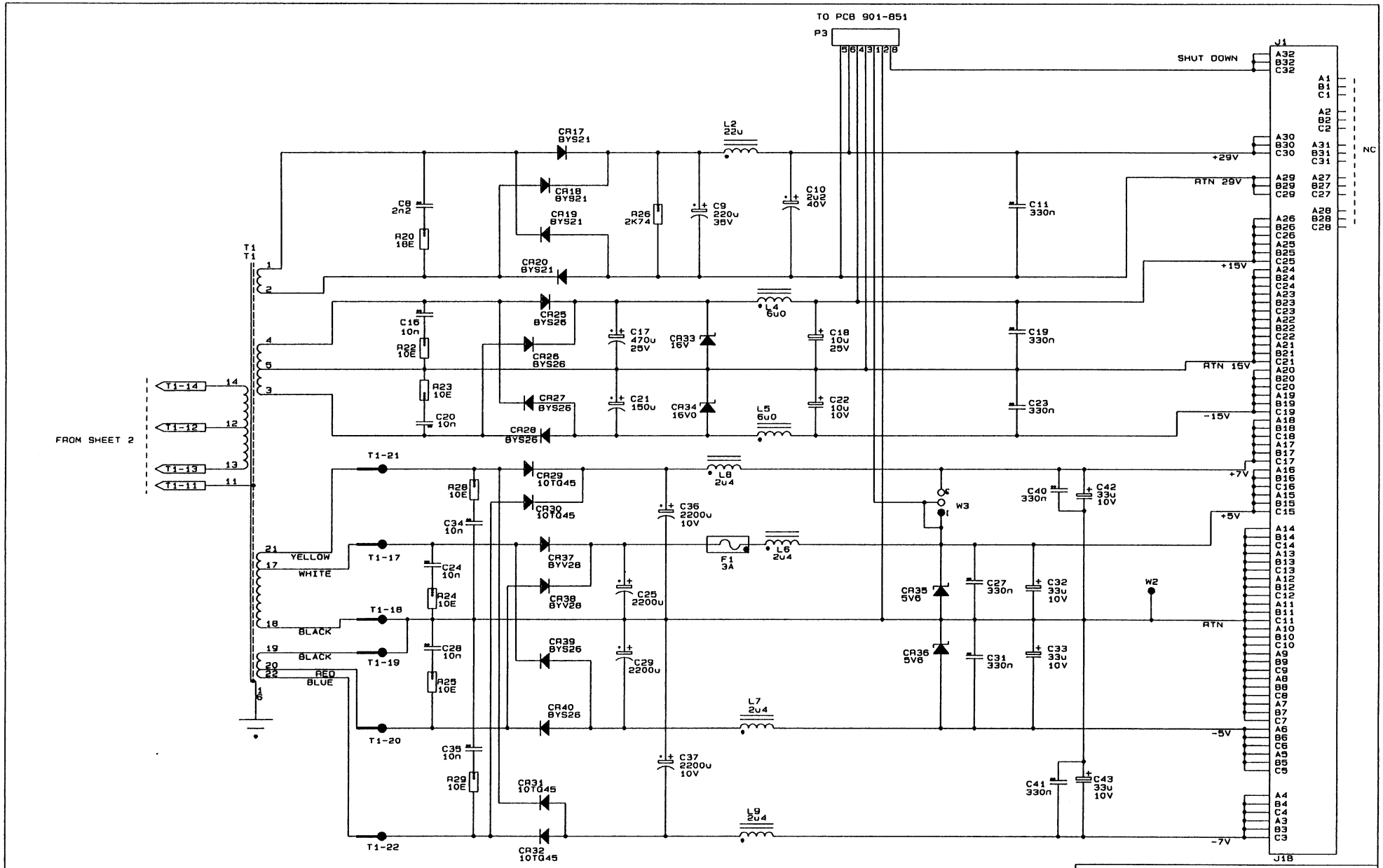

RE TECHNOLOGY AS		
RE122 SIGNAL GENERATOR		
Title		
POWER SUPPLY MAIN BOARD		
Size	Document Number	REV
A	901-850 971-396 985-294	16a
Date: November 12, 1992	Sheet 3 of 3	

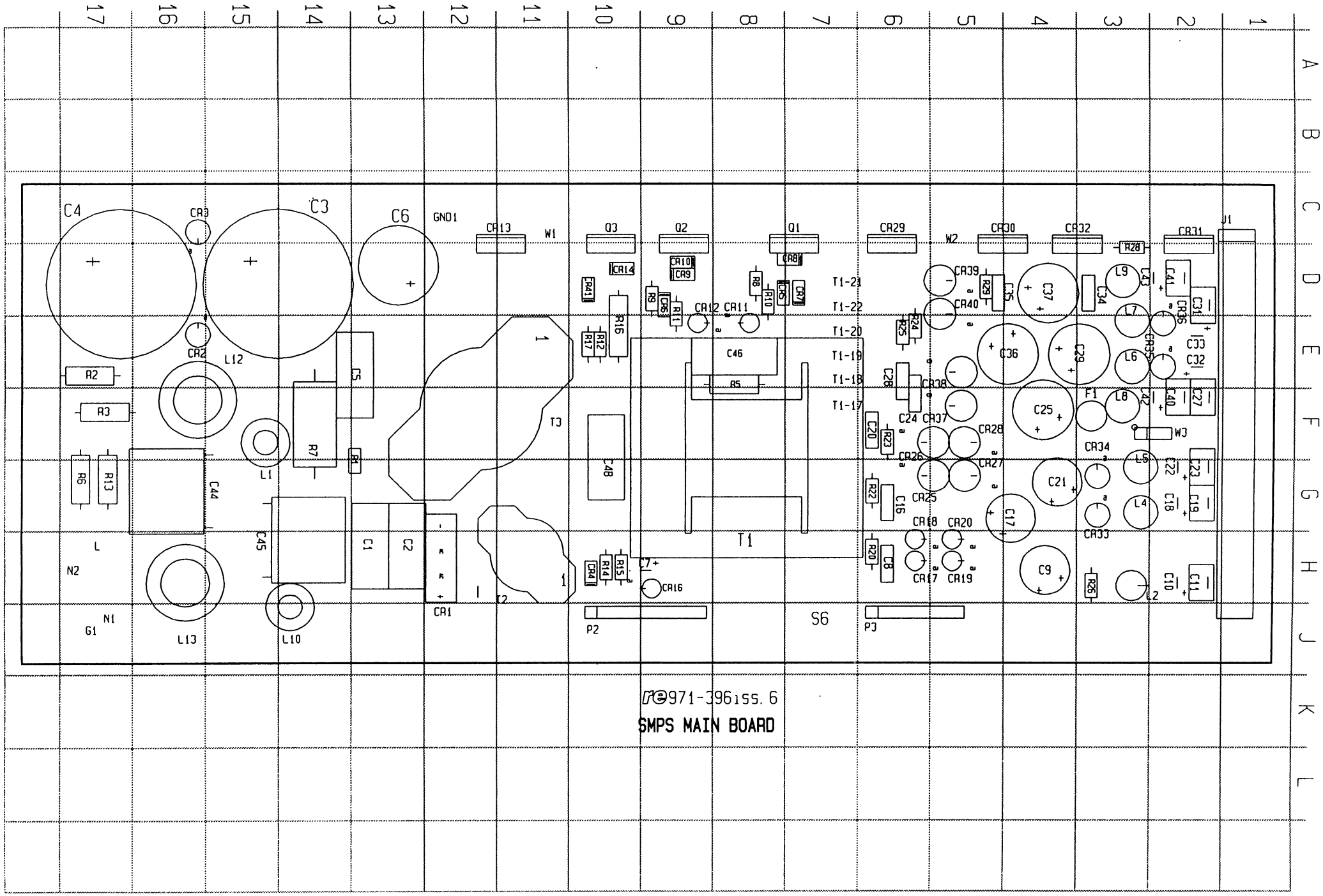

re971-396iss. 6

SMPS MAIN BOARD

COMP	LOC	COMP	LOC	COMP	LOC	COMP	LOC	COMP	LOC	COMP	LOC	COMP	LOC	COMP	LOC	COMP	LOC	COMP	LOC	COMP	LOC	COMP	LOC
CR1	J12	F1	F3																				
CR2	E16	GND1	C12																				
CR3	C16	G1	J17																				
CR4	H10	J1	C2																				
CR5	D8	L	H17																				
CR6	D9	L1	G15																				
CR7	D7	L2	H3																				
CR8	D8	L4	G3																				
CR9	D9	L5	G3																				
CR10	D9	L6	E3																				
CR11	D8	L7	D3																				
CR12	D9	L8	F3																				
CR13	C12	L9	D3																				
CR14	D10	L10	J14																				
CR16	H9	L12	E15																				
CR17	H6	L13	J16																				
CR18	G6	N1	J17																				
CR19	H5	N2	H17																				
CR20	G5	P2	J10																				
CR25	G6	P3	J6																				
CR26	G6	Q1	C7																				
CR27	G5	Q2	C9																				
CR28	F5	Q3	C10																				
CR29	C6	R1	G13																				
CR30	C5	R2	E17																				
CR31	C2	R3	F17																				
CR32	C4	R5	F8																				
CR33	H3	R6	G17																				
CR34	F3	R7	F14																				
CR35	E3	R8	D8																				
CR36	D2	R9	D9																				
CR37	F6	R10	D8																				
CR38	F6	R11	D9																				
CR39	D5	R12	E10																				
CR40	D5	R13	G17																				
CR41	D10	R14	H10																				
C1	H13	R15	H10																				
C2	H13	R16	E10																				
C3	C14	R17	E10																				
C4	C17	R20	H6																				
C5	E13	R22	G6																				
C6	C13	R23	F6																				
C7	H10	R24	E6																				
C8	H6	R25	E6																				
C9	H4	R26	H3																				
C10	H2	R28	D3																				
C11	H2	R29	D5																				
C16	G6	T1	H8																				
C17	G4	T1-17	F7																				
C18	G2	T1-18	E7																				
C19	G2	T1-19	E7																				
C20	F6	T1-20	E7																				
C21	G4	T1-21	D7																				
C22	F2	T1-22	D7																				
C23	F2	T2	J12																				
C24	F6	T3	F11																				
C25	F4	W1	C11																				
C27	F2	W2	C5																				
C28	E6	W3	F2																				
C29	E4																						
C31	D2																						
C32	E2																						
C33	E2																						
C34	D3																						
C35	D4																						
C36	E5																						
C37	D4																						
C40	F2																						
C41	D2																						
C42	F3																						
C43	D3																						
C44	G15																						
C45	H15																						
C46	E8																						
C48	G10																						

COMPONENT SIDE

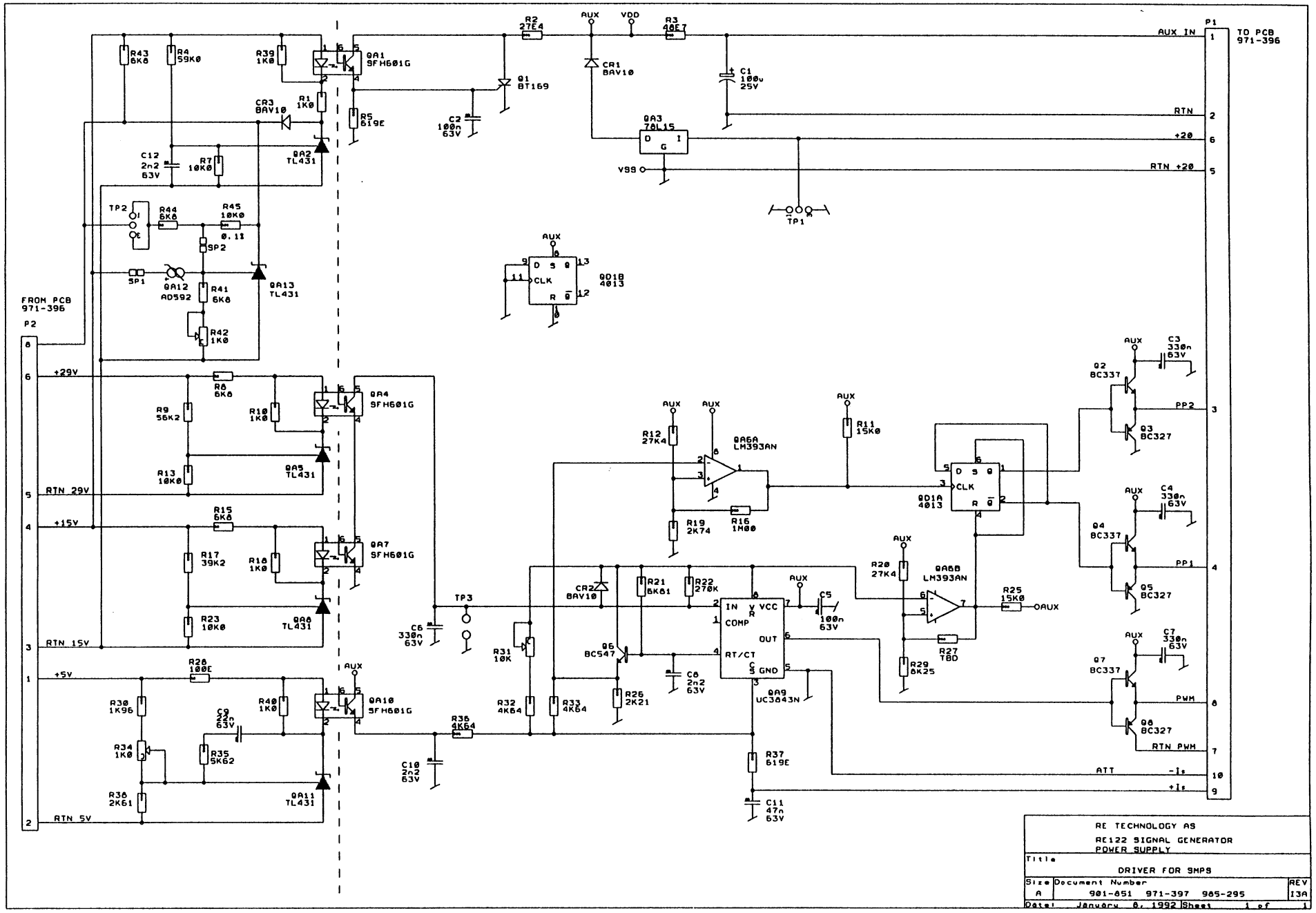

RE TECHNOLOGY AS
RE122 SIGNAL GENERATOR
POWER SUPPLY

Title: DRIVER FOR SMPS

Size	Document Number	REV
A	901-651 971-397 965-295	13A

Date: January 8, 1992 Sheet 1 of 1

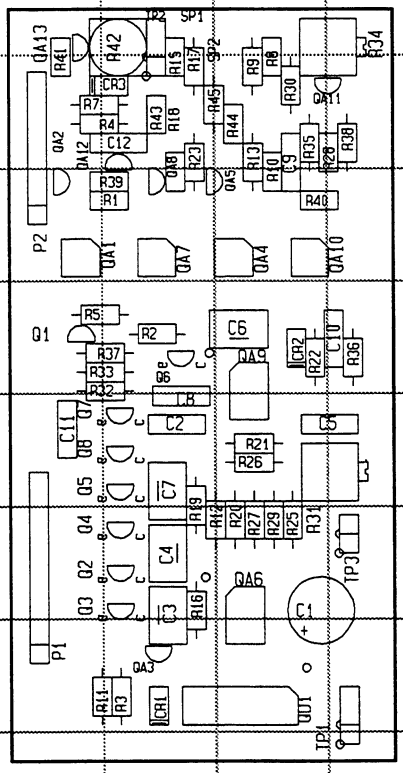
SMPS DRIVER BOARD 70971-397iss. 3
TP1
TP2
TP3
SP1
SP2
C1
C2
C3
C4
C5
C6
C7
C8
C9
C10
C11
C12
CR1
CR2
CR3
UD1
P1
P2
Q1
Q2
Q3
Q4
Q5
Q6
Q7
Q8
Q9
QA1
QA2
QA3
QA4
QA5
QA6
QA7
QA8
QA9
QA10
QA11
QA12
QA13
R1
R2
R3
R4
R5
R6
R7
R8
R9
R10
R11
R12
R13
R14
R15
R16
R17
R18
R19
R20
R21
R22
R23
R24
R25
R26
R27
R28
R29
R30
R31
R32
R33
R34
R35
R36
R37
R38
R39
R40
R41
R42
R43
R44
R45

COMP	LOC	COMP	LOC	COMP	LOC	COMP	LOC	COMP	LOC	COMP	LOC	COMP	LOC	COMP	LOC	COMP	LOC	COMP	LOC	COMP	LOC	COMP	LOC	COMP	LOC
CR1	F12	R40	G8																						
CR2	G9	R41	E6																						
CR3	F7	R42	F6																						
C1	G11	R43	F7																						
C2	F10	R44	G7																						
C3	F12	R45	F7																						
C4	F11	SP1	F6																						
C5	G10	SP2	G7																						
C6	G9	TP1	G13																						
C7	F10	TP2	F6																						
C8	F10	TP3	H11																						
C9	G7																								
C10	H9																								
C11	E10																								
C12	F7																								
P1	E12																								
P2	E8																								
QA1	F8																								
QA2	E7																								
QA3	F12																								
QA4	G8																								
QA5	G8																								
QA6	G11																								
QA7	F8																								
QA8	F8																								
QA9	G9																								
QA10	H8																								
QA11	H7																								
QA12	E7																								
QA13	E7																								
QD1	G12																								
Q1	E9																								
Q2	E11																								
Q3	E11																								
Q4	E11																								
Q5	E10																								
Q6	F9																								
Q7	E10																								
Q8	E10																								
R1	F8																								
R2	F9																								
R3	F12																								
R4	E7																								
R5	E9																								
R7	E7																								
R8	G7																								
R9	G7																								
R10	G8																								
R11	F12																								
R12	G11																								
R13	G8																								
R15	F7																								
R16	F11																								
R17	F7																								
R18	F7																								
R19	F10																								
R20	G11																								
R21	G10																								
R22	G9																								
R23	F8																								
R25	G11																								
R26	G10																								
R27	G11																								
R28	H8																								
R29	G11																								
R30	G7																								
R31	G11																								
R32	E10																								
R33	E9																								
R34	H7																								
R35	G7																								
R36	H9																								
R37	E9																								
R38	H7																								
R39	E8																								

COMPONENT SIDE

SMPS Main Board (901850)

CAPACITORS

C 1	MKT-P 33n 250Vac X2	N	241092
C 2	MKT-P 33n 250Vac X2	N	241092
C 3	Electrolytic 680u 200V ac	NN	261089
C 4	Electrolytic 680u 200V ac	NN	261089
C 5	MKP 0.1/630/5 R:8.5*15*17.5 RM6		241090
C 6	Electrolytic 10/450 1000h/85° R:16*25		260068
C 7	C Solid Aluminium 6u8 20% 25V Short Type		265103
C 8	MKT, 0.0022/63/10, R:2.5*6.5*7.2, RM2		241091
C 9	Electrolytic 220/35, 2000h/105°, R:10*12.5, RM2		261092
C 10	C Solid Aluminium 2u2 20% 40V Short Type		265112
C 11	MKT, 0.33/63/10, R:3.5*8*7.2, RM2		241072
C 16	MKT, 0.01/250/10, R:2.5*6.5*7.2, RM2		241069
C 17	Electrolytic 470/25, 2000h/105°, R:10*20, RM2		261094
C 18	C Solid Aluminium 10u 20% 25V Short Type		265110
C 19	MKT, 0.33/63/10, R:3.5*8*7.2, RM2		241072
C 20	MKT, 0.01/250/10, R:2.5*6.5*7.2, RM2		241069
C 21	Electrolytic 470/25, 2000h/105°, R:10*20, RM2		261094
C 22	C Solid Aluminium 10u 20% 25V Short Type		265110
C 23	MKT, 0.33/63/10, R:3.5*8*7.2, RM2		241072
C 24	MKT, 0.01/250/10, R:2.5*6.5*7.2, RM2		241069
C 25	Electrolytic 2200/16, 2000h/105°, R:13*25, RM2		261093
C 27	MKT, 0.33/63/10, R:3.5*8*7.2, RM2		241072
C 28	MKT, 0.01/250/10, R:2.5*6.5*7.2, RM2		241069
C 29	Electrolytic 2200/16, 2000h/105°, R:13*25, RM2		261093
C 31	MKT, 0.33/63/10, R:3.5*8*7.2, RM2		241072
C 32	C Solid Aluminium 33u 20% 10V Short Type		265105
C 33	C Solid Aluminium 33u 20% 10V Short Type		265105
C 34	MKT, 0.01/250/10, R:2.5*6.5*7.2, RM2		241069
C 35	MKT, 0.01/250/10, R:2.5*6.5*7.2, RM2		241069
C 36	Electrolytic 2200/16, 2000h/105°, R:13*25, RM2		261093
C 37	Electrolytic 2200/16, 2000h/105°, R:13*25, RM2		261093
C 40	MKT, 0.33/63/10, R:3.5*8*7.2, RM2		241072
C 41	MKT, 0.33/63/10, R:3.5*8*7.2, RM2		241072
C 42	C Solid Aluminium 33u 20% 10V Short Type		265105
C 43	C Solid Aluminium 33u 20% 10V Short Type		265105
C 44	MKT-P, 0.1 20% 250Vac X2,	NN	241076
C 45	MKT-P, 0.1 20% 250Vac X2,	NN	241076
C 46	MKP 0.1/630/5 R:8.5*15*17.5 RM6		241090
C 48	MKP 0.1/630/5 R:8.5*15*17.5 RM6		241090

DIODES

CR 1	Bridge Rectifier Vin:420 Io:4A	340213
CR 2	Transzorb diode unidirectional Vbr:250 Ipp:5 P:1500W	350440
CR 3	Transzorb diode unidirectional Vbr:250 Ipp:5 P:1500W	350440
CR 4	Diode Zener BZX79-18V	350633
CR 5	Diode BAV10 Si Vr-60V If-600mA	350022
CR 6	Diode BAV10 Si Vr-60V If-600mA	350022
CR 7	Diode Zener C15-0.4W DO-35	350611
CR 8	Diode Zener C15-0.4W DO-35	350611

CR 9	Diode Zener C15-0.4W DO-35	350611
CR 10	Diode Zener C15-0.4W DO-35	350611
CR 11	Diode BYV26C Vr-600V If-1A	350435
CR 12	Diode BYV26C Vr-600V If-1A	350435
CR 13	Diode BYR29-600 TO220	350442
CR 14	Diode Zener C15-0.4W DO-35	350611
CR 16	Diode BYV26C Vr-600V If-1A	350435
CR 17	Diode Schottky Vrrm:45V I:1A	350439
CR 18	Diode Schottky Vrrm:45V I:1A	350439
CR 19	Diode Schottky Vrrm:45V I:1A	350439
CR 20	Diode Schottky Vrrm:45V I:1A	350439
CR 25	Diode Schottky Vrrm:45V I:3A	350438
CR 26	Diode Schottky Vrrm:45V I:3A	350438
CR 27	Diode Schottky Vrrm:45V I:3A	350438
CR 28	Diode Schottky Vrrm:45V I:3A	350438
CR 29	Diode Schottky 45V 10A TO220AC	350436
CR 30	Diode Schottky 45V 10A TO220AC	350436
CR 31	Diode Schottky 45V 10A TO220AC	350436
CR 32	Diode Schottky 45V 10A TO220AC	350436
CR 33	Diode Zener 1N5353B 16V0/5W	350674
CR 34	Diode Zener 1N5353B 16V0/5W	350674
CR 35	Diode Zener 1N5339B 5V6/5W	350673
CR 36	Diode Zener 1N5339B 5V6/5W	350673
CR 37	Diode BYV28-100 Vr-100V If-3.5A Sod-64	350443
CR 38	Diode BYV28-100 Vr-100V If-3.5A Sod-64	350443
CR 39	Diode Schottky Vrrm:45V I:3A	350438
CR 40	Diode Schottky Vrrm:45V I:3A	350438
CR 41	Diode BAV10 Si Vr-60V If-600mA	350022

FUSES

F 1	Fuse 3/10 A	450132

CONNECTORS

J 1	DIN 41612 96 pol male 90° C class II	805923

CHOKES

L 1	Coil For RE122 SMPS	740232
L 2	Choke HF Mini 22uH 10% 0.43A	703012
L 4	Choke 0.6uH For RE122 SMPS	703075
L 5	Choke 0.6uH For RE122 SMPS	703075
L 6	Choke 0.6uH For RE122 SMPS	703075
L 7	Choke 0.6uH For RE122 SMPS	703075
L 8	Choke 0.6uH For RE122 SMPS	703075
L 9	Choke 0.6uH For RE122 SMPS	703075
L 10	Coil For RE122 SMPS	740232
L 12	Coil For Re122 SMPS	740233
L 13	Coil For RE122 SMPS L13	740258

TRANSISTORS

Q 1	Transistor PWR-FET IRF832N 500V 4A TO-220AB	360264
Q 2	Transistor PWR-FET IRF832N 500V 4A TO-220AB	360264
Q 3	Transistor PWR-FET IRF832N 500V 4A TO-220AB	360264

RESISTORS

R 1	Ntc Thermistor S234/20% 15E	160056
R 2	R Power Metal Film 47K 2W 5% TC250 RM7	121228
R 3	R Power Metal Film 47K 2W 5% TC250 RM7	121228
R 5	R Power Metal Film 47K 2W 5% TC250 RM7	121228
R 6	R Metal Film 100K 5% 2W TC250	121218
R 7	R Wirewound 1E0 10% 5W	133059
R 8	R Metal Film 221E 1% 0.5W TC50	113221
R 9	R Metal Film 221E 1% 0.5W TC50	113221
R 10	R Metal Film 82E5 1% 0.5W TC50	112825
R 11	R Metal Film 82E5 1% 0.5W TC50	112825
R 12	R Metal Film 82E5 1% 0.5W TC50	112825
R 13	R Metal Film 100K 5% 2W TC250	121218
R 14	R Metal Film 22E1 1% 0.5W TC50	112221
R 15	R Metal Film 0E00	111000
R 16	R Wirewound 0E47 10% 3W	130514
R 17	R Metal Film 10E0 1% 0.4W TC50	112100
R 20	R Metal Film 18E7 1% 0.5W TC50	112187
R 22	R Metal Film 10E0 1% 0.4W TC50	112100
R 23	R Metal Film 10E0 1% 0.4W TC50	112100
R 24	R Metal Film 10E0 1% 0.4W TC50	112100
R 25	R Metal Film 10E0 1% 0.4W TC50	112100
R 26	R Metal Film 2K74 1% 0.5W TC50	114274
R 28	R Metal Film 10E0 1% 0.4W TC50	112100
R 29	R Metal Film 10E0 1% 0.4W TC50	112100

TRANSFORMERS

T 1	Transformator T1 USED IN901-709	772010
T 2	Transformator T2 USED IN901-709	772009
T 3	Transformator T3 USED IN901-709	772008

MISCELLANEOUS

Screw Pozidrive panhead M2.5x5	008205
Screw Pozidrive panhead M2.5x8	008208
Screw Pozidrive panhead M4x5	008405
Screw Pozidrive Countersunk M3X10	009310
Screw Pozidrive countersunk M3x12	009312
Hexagon Cylinder Screw M2.5x8 Rustproof	010208
Lock washer D4,3/7x0,5	046407
Lock washer D6,4/10x0,7	046409
Tubular Rivet 2.5X10	060310
Soldering lug 4,3x12-3	061341
Soldering lug 4,3x12-3	061341
Sleewing shrink blk. 6,4	692007
Sleeving heat shrincable	692008

Sleeving heat shrincable	692008
Sleewing shrink clr. 3,2	692011
Ferrit Bead Ø8 Ø4x10mm	704264
Ferrit Bead Ø8 Ø2x10mm	704265
Power line filter	802219
Conn Banana Receptable	803241
Heat Transfer Block For Smps	816275
Clamp For Heat Transfer Block	816276
Insulating Sheet Polycarbonate F. Smps MO 86	816278
Solder Terminal 0.1 O2	823303
Twist-Form Strip Gasket For RE122/5Smps	837810
L-piece for PCB	857041
Sh.snap rivet nylon \5mm	857050
Assy For RE122 Smps Switch Driver	901851
PCB Isolationsflex F. Smps MO86	971341
PCB For RE122 Smps Main Board	971396
Rear Plate Smps RE122	978287
Labels For PCB With 72 Pcs Each Of Ark 48x7	980722

SMPS Driver Board (901851)

CAPACITORS

C 1	Electrolytic 100/25, 2000h/85°, R:6.3*11, RM2	261073
C 2	MKT, 0.1/63/10, R:2.5*6.5*7.2, RM2	241070
C 3	MKT, 0.33/63/10, R:3.5*8*7.2, RM2	241072
C 4	MKT, 0.33/63/10, R:3.5*8*7.2, RM2	241072
C 5	MKT, 0.1/63/10, R:2.5*6.5*7.2, RM2	241070
C 6	MKT, 0.33/63/10, R:3.5*8*7.2, RM2	241072
C 7	MKT, 0.33/63/10, R:3.5*8*7.2, RM2	241072
C 8	MKT, 0.0022/63/10, R:2.5*6.5*7.2, RM2	241091
C 9	MKT, 0.022/63/10, R:2.5*6.5*7.2, RM2	241078
C 10	MKT, 0.0022/63/10, R:2.5*6.5*7.2, RM2	241091
C 11	MKT, 0.047/63/10, R:2.5*6.5*7.2, RM2	241083
C 12	MKT, 0.0022/63/10, R:2.5*6.5*7.2, RM2	241091

DIODES

CR 1	Diode BAV10 Si Vr-60V If-600mA	350022
CR 2	Diode BAV10 Si Vr-60V If-600mA	350022
CR 3	Diode BAV10 Si Vr-60V If-600mA	350022

PLUGS

P 1	Pin header 10 pol 90° 1:6.7mm	805960
P 2	Pin header 8 pol 90° 1:6.7mm with lock	805851

TRANSISTORS

Q 1	Thyristor BT 169-B TO-92	345002
Q 2	Transistor BC337 npn	360180
Q 3	Transistor BC327-25 SI PNP 45V 1A 800mW TO-92	360224
Q 4	Transistor BC337 npn	360180
Q 5	Transistor BC327-25 SI PNP 45V 1A 800mW TO-92	360224
Q 6	Transistor BC547B npn	360159
Q 7	Transistor BC337 npn	360180
Q 8	Transistor BC327-25 SI PNP 45V 1A 800mW TO-92	360224

INTEGRATED ANALOG CIRCUITS

QA 1	Optoisolutor 5.3KV. SFH601G (4 Moduler)	360275
QA 2	IC TL431 ADJ. Precision Shunt Regulators	364849
QA 3	IC LM78L15 3-Terminal Positiv Reg +15V 100mA	364888
QA 4	Optoisolutor 5.3KV. SFH601G (4 Moduler)	360275
QA 5	IC TL431 ADJ. Precision Shunt Regulators	364849
QA 6	IC LM393 Low power dual voltage	364838
QA 7	Optoisolutor 5.3KV. SFH601G (4 Moduler)	360275
QA 8	IC TL431 ADJ. Precision Shunt Regulators	364849
QA 9	IC 3843 PWM Controller	364887
QA 10	Optoisolutor 5.3KV. SFH601G (4 Moduler)	360275
QA 11	IC TL431 ADJ. Precision Shunt Regulators	364849
QA 12	IC AD592AN Temp.Transducer	365044
QA 13	IC TL431 ADJ. Precision Shunt Regulators	364849

INTEGRATED DIGITAL CIRCUITS

QD 1	IC HEF4013BP Dual D-type Flip-Flop	364222

RESISTORS

R 1	R Metal Film 1K00 5% 0.2W TC250	107410
R 2	R Metal Film 27E4 1% 0.5W TC50	112274
R 3	R Metal Film 48E7 1% 0.5W TC50	112487
R 4	R Metal Film 59K0 1% 0.4W TC50	115590
R 5	R Metal Film 121E 1% 0.5W TC50	113121
R 7	R Metal Film 10K0 1% 0.5W TC50	115100
R 8	R Metal Film 6K80 5% 0.2W TC250	107468
R 9	R Metal Film 56K2 1% 0.5W TC50	115562
R 10	R Metal Film 1K00 5% 0.2W TC250	107410
R 11	R Metal Film 15K0 1% 0.5W TC50	115150
R 12	R Metal Film 27K4 1% 0.5W TC50	115274
R 13	R Metal Film 10K0 1% 0.5W TC50	115100
R 15	R Metal Film 2K70 5% 0.2W TC250	107427
R 16	R Metal Film 1M00 1% 0.5W TC50	117100
R 17	R Metal Film 39K2 1% 0.5W TC50	115392
R 18	R Metal Film 1K00 5% 0.2W TC250	107410
R 19	R Metal Film 2K74 1% 0.5W TC50	114274
R 20	R Metal Film 27K4 1% 0.5W TC50	115274
R 21	R Metal Film 6K81 1% 0.5W TC50	114681
R 22	R Metal Film 270K 1% 0.5W TC50	116270
R 23	R Metal Film 10K0 1% 0.5W TC50	115100
R 25	R Metal Film 15K0 1% 0.5W TC50	115150
R 26	R Metal Film 2K21 1% 0.5W TC50	114221
R 28	R Metal Film 100E 5% 0.2W TC250	107310
R 29	R Metal Film 8K25 1% 0.5W TC50	114825
R 30	R Metal Film 1K96 1% 0.5W TC50	114196
R 31	Cermet Trimpot 10K 20% 0.75W TC70	182320
R 32	R Metal Film 4K64 1% 0.5W TC50	114464
R 33	R Metal Film 4K64 1% 0.5W TC50	114464
R 34	Cermet Trimpot 1K 20% 0.75W TC70	182325
R 35	R Metal Film 5K62 1% 0.5W TC50	114562
R 36	R Metal Film 4K64 1% 0.5W TC50	114464
R 37	R Metal Film 619E 1% 0.5W TC50	113619
R 38	R Metal Film 2K61 1% 0.5W TC50	114261
R 39	R Metal Film 1K00 5% 0.2W TC250	107410
R 40	R Metal Film 1K00 5% 0.2W TC250	107410
R 41	R Metal Film 6K80 5% 0.2W TC250	107468
R 42	Cermet Trimpot 1K 10% 0.5W TC70	182310
R 43	R Metal Film 6K80 5% 0.2W TC250	107468
R 44	R Metal Film 6K80 5% 0.2W TC250	107468
R 45	Metal Film 10K0 0.1% 0.25W TC15	141010

TESTPOINTS

TP 1	Pin header 3 pol straight l:6.7mm with lock	805894
TP 2	Pin header 3 pol straight l:6.7mm with lock	805894
TP 3	Pin header 2 pol straight l:6.7mm with lock	805951

MISCELLANEOUS

PCB For RE122 Smps SWitch Driver	971397
Labels For PCB With 72 Pcs Each Of Ark 48x7	980722

9. SYNTHESIZER 1

9.1 Circuit Description

Fig. 9.1 shows the block diagram of Synthesizer 1.

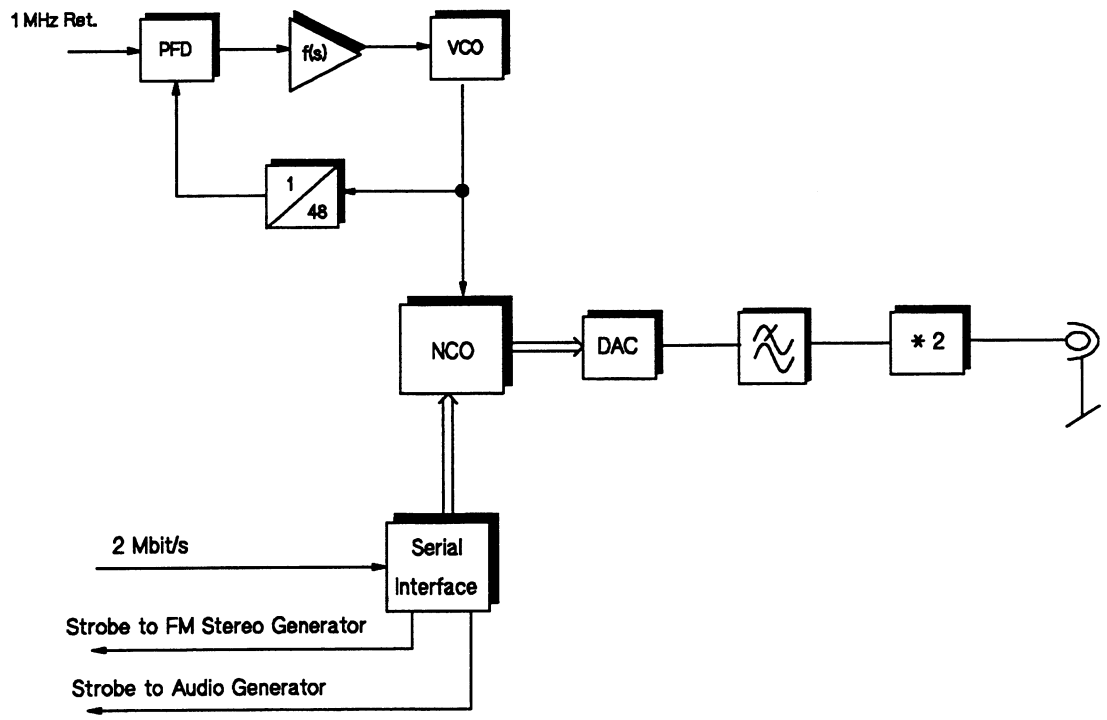

Fig. 9.1 - Block Diagram of Synthesizer 1

Synthesizer 1 generates a signal covering the range from 10 to 20 MHz in 1 Hz steps.

The circuit board may be divided into three main blocks:

1. Main CPU Interface
2. 48 MHz Phase Locked Loop
3. Numerically Controlled Oscillator, NCO

9.1.1 Main CPU Interface

The main CPU interface is made by a PLD converting the 2 Mbit/s serial interface into a micro processor type interface for the NCO.

This interface also generates serial bus strobes for use by the FM Stereo Generator and Audio Generator analog board (see sections 21 and 22).

9.1.2 48 MHz Phase Locked Loop

The 48 MHz clock is made by the VCO locked to the 1 MHz reference signal. The circuit is an ordinary frequency multiplying PLL with large bandwidth in order to track the high purity 1 MHz reference signal.

9.1.3 Numerically Controlled Oscillator

A 5 to 10 MHz signal is generated by an NCO which is controlled by the main CPU, via the serial 2 Mbit/s interface, and clocked by the 48 MHz clock.

The NCO CMOS output is converted to ECL levels, retimed and fed to a 10 bit DAC followed by a 10 MHz low-pass filter and a frequency doubler. The resulting output is a 10 to 20 MHz ECL signal with 1 Hz resolution.

Please note that two different, but functionally identical, NCO chips may be used on the board. This means that either QD101 the Qualcomm Q2334C or QD107 the standard STEL1175 NCO is mounted on the board. If QD101 is mounted the solder points SP101, SP103, SP103 and SP300 must all be connected between pin 1 and 2. If QD107 is mounted pin 2 and 3 should be connected.

Similarly, the DAC may be one of two functionally identical parts, as seen in Fig. 9.1.

9.2 Adjustments

Mount Synthesizer 1 on the extension board 901-885.

See the PCB layout for component locations.

Frequency setting of RE 125: 100 MHz.

In the following sections measure RF levels and purity using a Spectrum analyzer with AC coupling and 50 Ω input impedance.

9.2.1 48 MHz PLL

Connect the Spectrum analyzer to TP201.

Adjust R237 until the 48 MHz level is -3 dBm.

Connect a DC voltmeter to TP200.

Adjust L203 until the DC voltage at TP200 is 8 V ±0.1 V.

Short-circuit TP203 pin 1 and 2, or QD206 pin 15 and ground, and check that the frequency at TP201 falls below 44 MHz and that the DC voltage at TP200 is between 2 and 4 V.

Remove the short circuit from TP203.

Short-circuit TP202 pin 1 and 2, or QD208 pin 7 and ground, and check that the frequency at TP201 increases above 49 MHz and that the DC voltage at TP200 is between 12 and 15 V.

Remove the short circuit from TP202.

Remove the Spectrum Analyzer from TP201 and check that the DC voltage at TP201 now is between 7.5 and 8.4 V.

9.2.2 NCO & Output Test

There are no adjustments needed for the NCO and the output circuit, but a few tests may be performed.

Set the RE 125 frequency to 100 MHz and connect the Spectrum Analyzer to TP402.

Check that the 5 MHz level is -12 dBm ±2 dB and note the value.

Change the RE 125 frequency to 99.999999 MHz, and check that the level at TP402 is within +1 and -2.2 dB from the noted 5 MHz value.

Set the RE 125 frequency to 99.24 MHz and connect the Spectrum Analyzer to the SMB output connector.

Check that the 19.24 MHz carrier level is between +2 and -10 dBm and that the sidebands 100 kHz from the carrier are more than 59 dB below the carrier.

9.3 Schematic Diagrams

The schematic diagram for Synthesizer 1 is located in the following. The diagram number is 985-419.

9.4 Component Locations

The component locations on Synthesizer 1 are shown in the following.

9.5 Parts List

A copy of the parts list from production documentation is located in the following. The code number of the assembled PCB is 902-057.

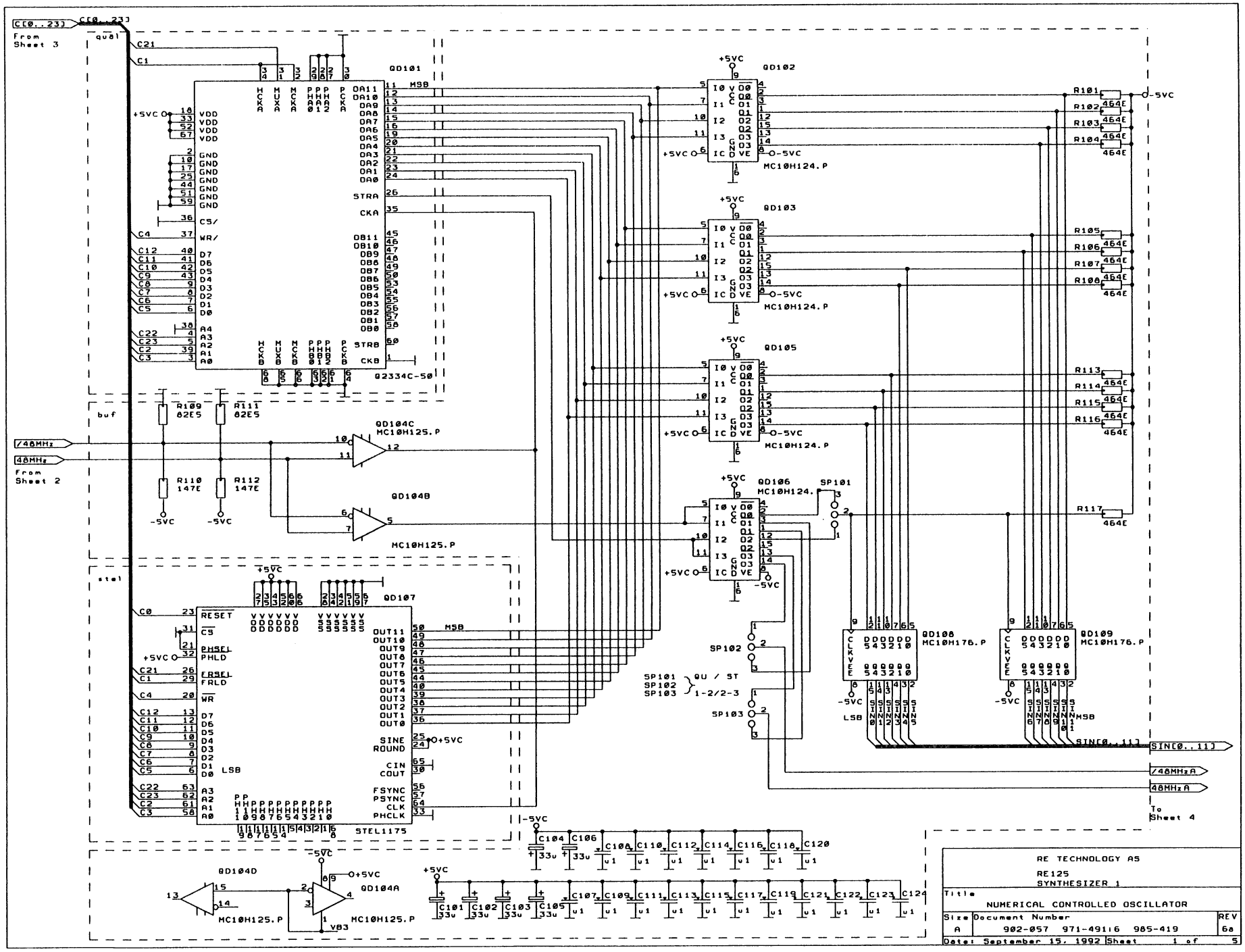
C[0..23]
From Sheet 3
qual
QD101
Q2334C-50
buf
/48MHz
48MHz
From Sheet 2
QD104C
MC10H125.P
QD104B
MC10H125.P
QD104D
MC10H125.P
QD104A
MC10H125.P
stel
QD107
STEL1175
QD102
MC10H124.P
QD103
MC10H124.P
QD105
MC10H124.P
QD106
MC10H124.
SP101
SP102
SP103
QU / ST
1-2/2-3
QD108
MC10H176.P
QD109
MC10H176.P
SINE ROUND
SINE[0..11]
/48MHzA
48MHzA
To Sheet 4
RE TECHNOLOGY AS
RE125
SYNTHESIZER 1
Title
NUMERICAL CONTROLLED OSCILLATOR
Size A
Document Number 902-057 971-49116 985-419
REV 6a
Date: September 15, 1992
Sheet 1 of 5

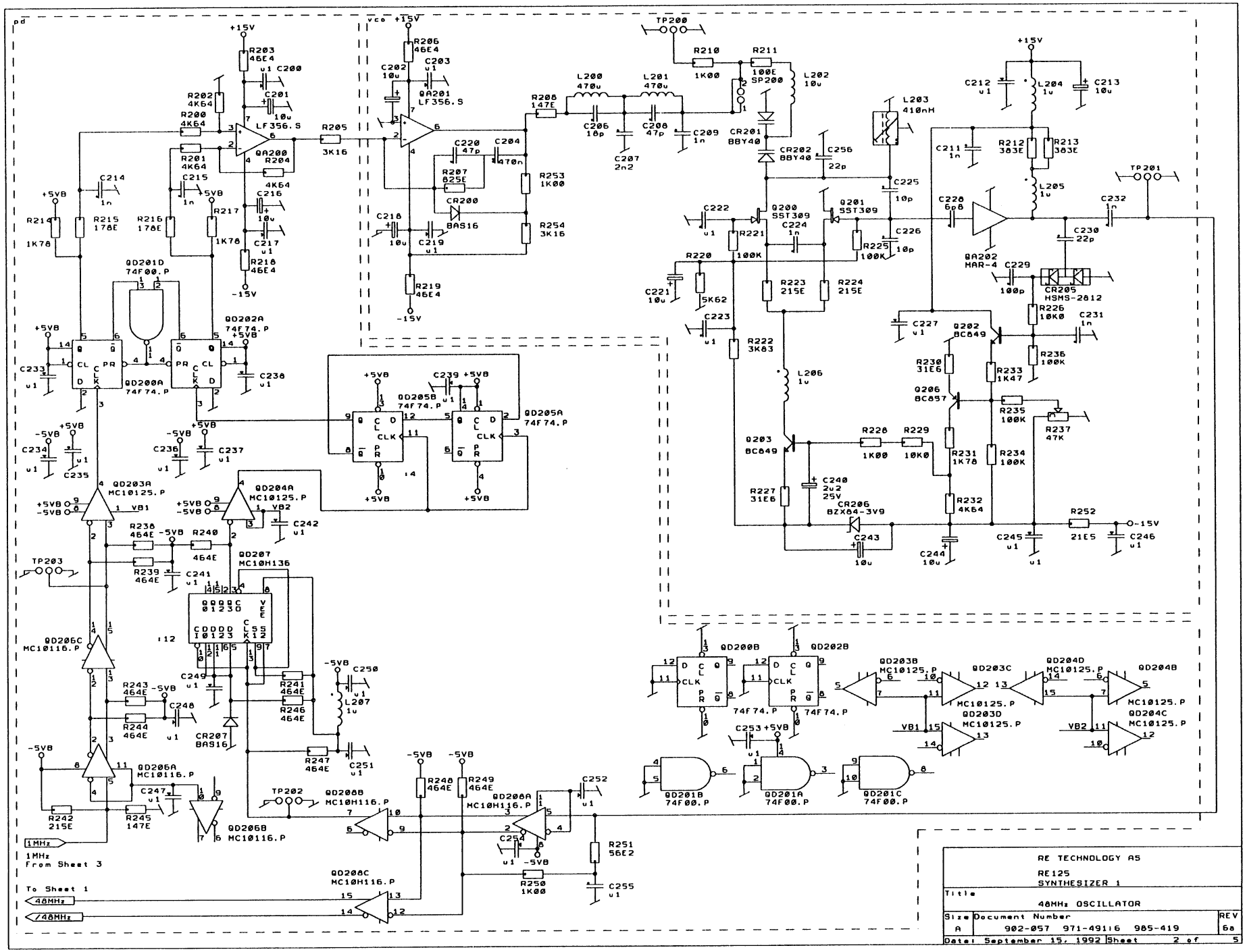

RE TECHNOLOGY AS

RE125
SYNTHESIZER 1

Title

48MHz OSCILLATOR

Size	Document Number	REV
A	902-057 971-49116 985-419	6a

Date: September 15, 1992 Sheet 2 of 5

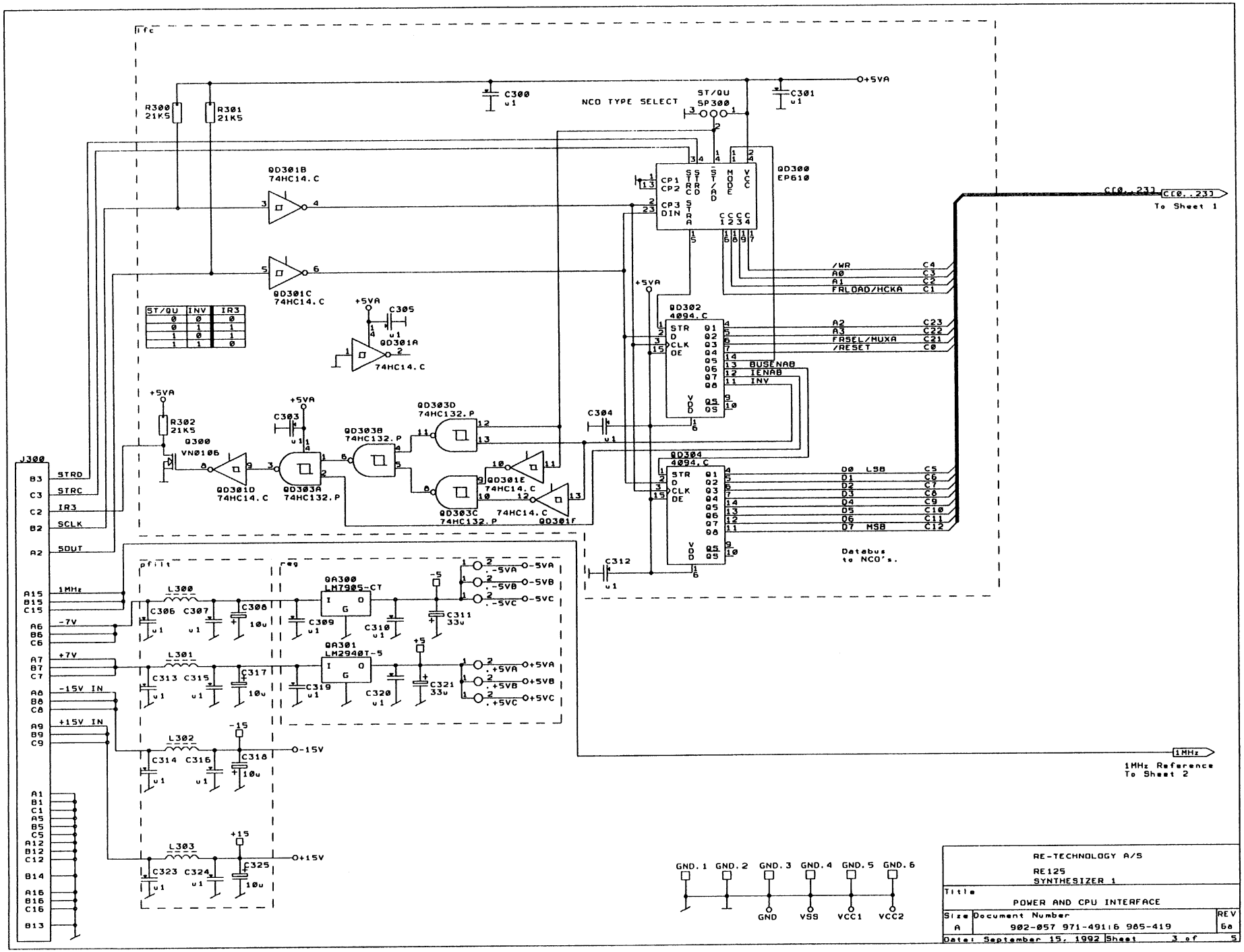

RE-TECHNOLOGY A/S

RE125
SYNTHESIZER 1

Title
POWER AND CPU INTERFACE

Size	Document Number	REV
A	902-057 971-4916 985-419	6a

Date: September 15, 1992 Sheet 3 of 5

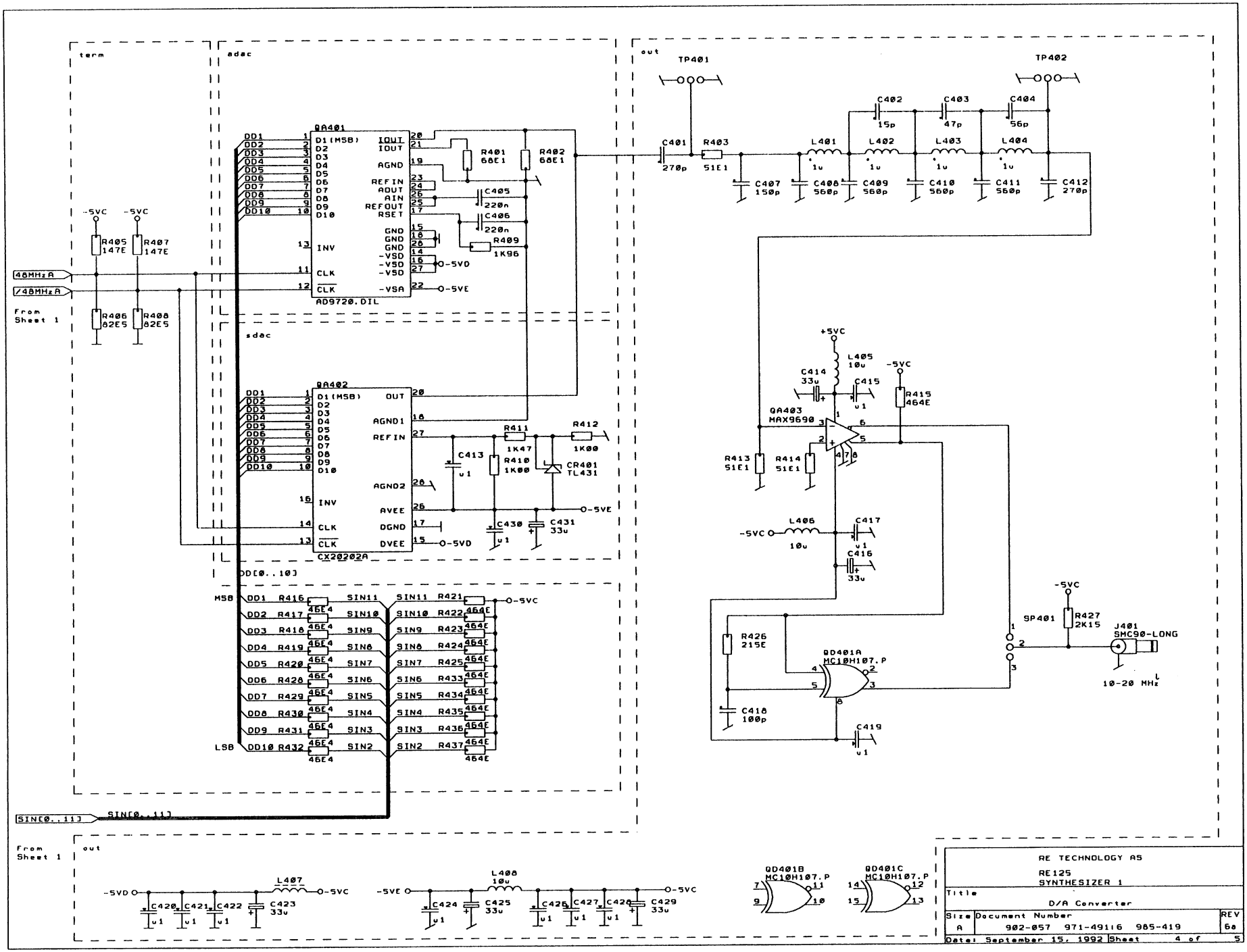
term
sdac
out
QA401
AD9720.DIL
QA402
CX20202A
QA403
MAX9690
QD401A
MC10H107.P
QD401B
MC10H107.P
QD401C
MC10H107.P
TP401
TP402
J401
SMC90-LONG
10-20 MHz
48MHzA
/48MHzA
From Sheet 1
DD[0..10]
SIN[0..11]
MSB
LSB
RE TECHNOLOGY AS
RE125
SYNTHESIZER 1
Title
D/A Converter
Size
A
Document Number
902-057 971-49116 985-419
REV
6a
Date: September 15, 1992
Sheet 4 of 5

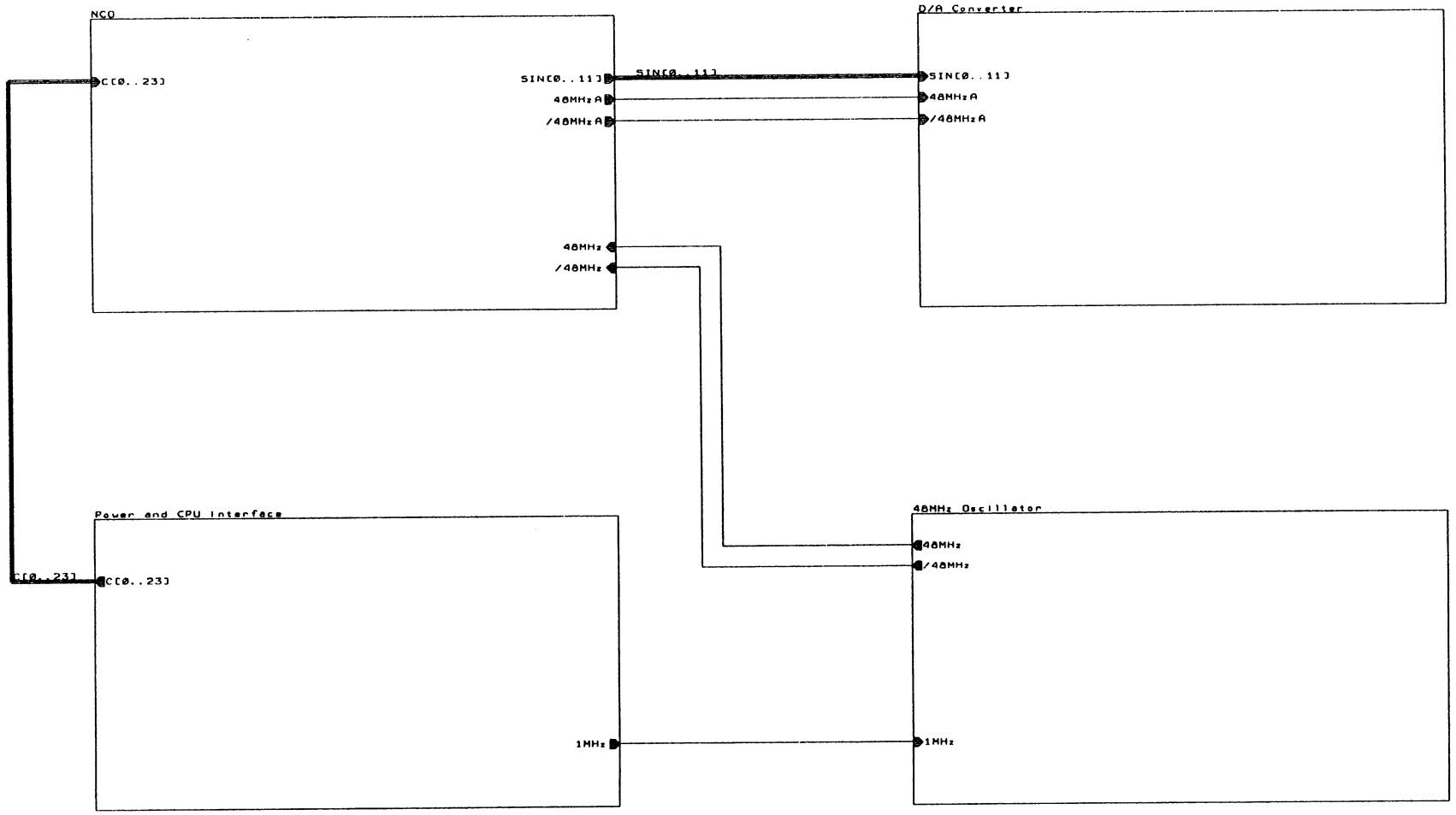

RE-TECHNOLOGY A/S

RE125
SYNTHESIZER 1

Title
ROOT SHEET

Size	Document Number	REV
A	902-057 971-49116 985-419	6a

Date: September 15, 1992 Sheet 5 of 5

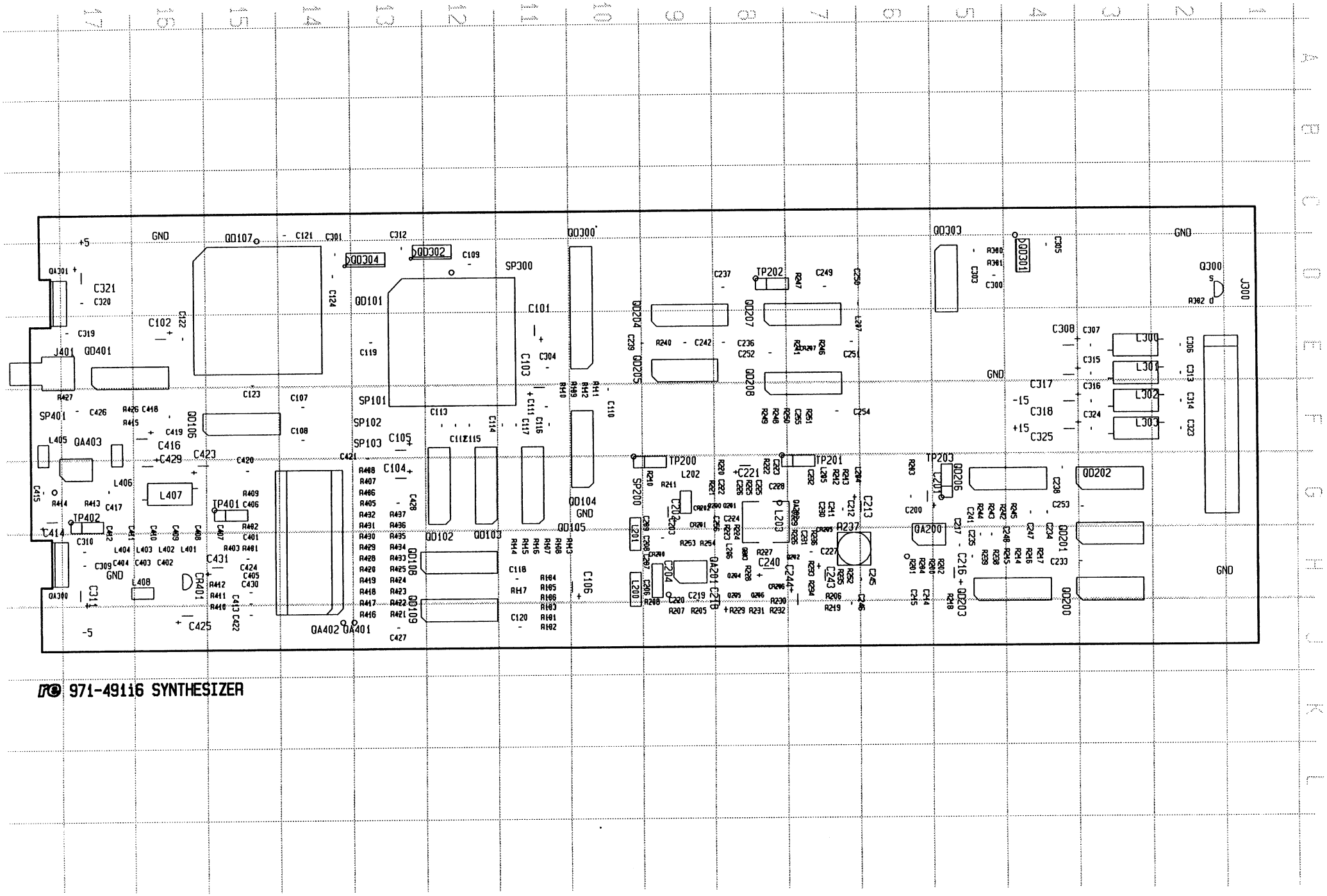
GND
+5
-5
-15
+15
QD107
QD101
QD102
QD103
QD104
QD105
QD106
QD108
QD109
QD200
QD201
QD202
QD203
QD204
QD205
QD206
QD207
QD208
QD300
QD301
QD302
QD304
QD401
SP300
SP101
SP102
SP103
SP200
SP401
TP200
TP201
TP202
TP203
TP401
TP402
QA200
QA201
QA301
QA300
QA402
QA401
J300
J401
L300
L301
L302
L303
L401
L402
L403
L405
L406
L407
L408
L200
L201
L202
L203
CR401
C101
C102
C103
C104
C105
C106
C216
C237
C249
C250
C251
C252
C254
C308
C307
C315
C316
C317
C318
C324
C325
C321
C320
C319
C122
C124
C121
C301
C312
C109
C119
C123
C107
C108
C113
C111
C115
C114
C117
C116
C118
C120
C110
C426
C418
C419
C416
C429
C423
C420
C421
C428
C414
C310
C309
C431
C424
C405
C430
C425
C422
C427
C413
C311
C415
C417
C406
C409
C408
C407
C402
C401
C404
C403
C242
C236
C207
C208
C205
C204
C203
C202
C201
C200
C221
C213
C212
C224
C225
C226
C223
C222
C220
C219
C240
C244
C243
C245
C246
C227
C237
C253
C238
C233
C234
C235
C247
C217
C218
C214
C215
C216
C206
C207
C208
C209
C210
C211
C212
C213
C214
C215
C216
C217
C218
C219
C220
C221
C222
C223
C224
C225
C226
C227
C228
C229
C230
C231
C232
C233
C234
C235
C236
C237
C238
C239
C240
C241
C242
C243
C244
C245
C246
C247
C248
C249
C250
C251
C252
C253
C254
C255
C256
C257
C258
C259
C260
C261
C262
C263
C264
C265
C266
C267
C268
C269
C270
C271
C272
C273
C274
C275
C276
C277
C278
C279
C280
C281
C282
C283
C284
C285
C286
C287
C288
C289
C290
C291
C292
C293
C294
C295
C296
C297
C298
C299
C300
C301
C302
C303
C304
C305
C306
C307
C308
C309
C310
C311
C312
C313
C314
C315
C316
C317
C318
C319
C320
C321
C322
C323
C324
C325
C326
C327
C328
C329
C330
C331
C332
C333
C334
C335
C336
C337
C338
C339
C340
C341
C342
C343
C344
C345
C346
C347
C348
C349
C350
C351
C352
C353
C354
C355
C356
C357
C358
C359
C360
C361
C362
C363
C364
C365
C366
C367
C368
C369
C370
C371
C372
C373
C374
C375
C376
C377
C378
C379
C380
C381
C382
C383
C384
C385
C386
C387
C388
C389
C390
C391
C392
C393
C394
C395
C396
C397
C398
C399
C400
C401
C402
C403
C404
C405
C406
C407
C408
C409
C410
C411
C412
C413
C414
C415
C416
C417
C418
C419
C420
C421
C422
C423
C424
C425
C426
C427
C428
C429
C430
C431
R101
R102
R103
R104
R105
R106
R107
R108
R109
R110
R111
R112
R113
R114
R115
R116
R117
R118
R119
R120
R121
R122
R123
R124
R125
R126
R127
R128
R129
R130
R131
R132
R133
R134
R135
R136
R137
R138
R139
R140

COMP	LOC	COMP	LOC	COMP	LOC	COMP	LOC	COMP	LOC	COMP	LOC	COMP	LOC	COMP	LOC	COMP	LOC	COMP	LOC	COMP	LOC	COMP	LOC
+5	D17	C242	E9	GND	G10	R113	H10	R415	F16														
+15	F4	C243	H7	J300	D1	R114	H11	R416	J13														
-5	J17	C244	H8	J401	E18	R115	H11	R417	J13														
-15	F4	C245	H6	L200	H10	R116	H11	R418	H13														
CR200	H9	C246	J6	L201	H10	R117	H11	R419	H13														
CR201	G9	C247	G4	L202	G9	R200	H5	R420	H13														
CR202	G9	C248	H5	L203	G8	R201	H6	R421	J13														
CR205	G7	C249	D7	L204	G7	R202	H5	R422	J13														
CR206	H8	C250	D6	L205	G7	R203	G6	R423	H13														
CR207	E7	C251	E6	L206	H8	R204	H6	R424	H13														
CR401	H16	C252	E8	L207	E7	R205	J9	R425	H13														
C101	D11	C253	G4	L300	E2	R206	H7	R426	F17														
C102	E16	C254	F6	L301	E2	R207	J9	R427	F17														
C103	E11	C255	F7	L302	F2	R208	H9	R428	H13														
C104	G13	C256	H8	L303	F2	R210	G9	R429	H13														
C105	F13	C300	D5	L401	H16	R211	G9	R430	H13														
C106	H10	C301	C14	L402	H16	R212	G7	R431	G13														
C107	F14	C303	D5	L403	H16	R213	G7	R432	G13														
C108	F14	C304	E11	L404	H17	R214	H4	R433	H13														
C109	D12	C305	D4	L405	F18	R215	H5	R434	H13														
C110	F10	C306	E2	L406	G17	R216	H4	R435	H13														
C111	F11	C307	E3	L407	G16	R217	H4	R436	G13														
C112	F12	C308	E4	L408	H17	R218	H5	R437	G13														
C113	F12	C309	H17	QA200	G5	R219	J7	SP101	F13														
C114	F12	C310	H17	QA201	H8	R220	G8	SP102	F13														
C115	F12	C311	J17	QA202	G7	R221	G9	SP103	F13														
C116	F11	C312	C13	QA300	H17	R222	G8	SP200	G10														
C117	F11	C313	F2	QA301	D17	R223	G8	SP300	D11														
C118	H11	C314	F2	QA401	J13	R224	G8	SP401	F18														
C119	E13	C315	E3	QA402	J14	R225	G8	TP200	G9														
C120	J11	C316	F3	QA403	F17	R226	H7	TP201	G7														
C121	C14	C317	E4	QD101	D13	R227	H8	TP202	D8														
C122	D16	C318	F4	QD102	H12	R228	H8	TP203	G5														
C123	F15	C319	E17	QD103	H11	R229	J8	TP401	G15														
C124	D14	C320	D17	QD104	G10	R230	H8	TP402	G17														
C200	G6	C321	D17	QD105	G10	R231	J8																
C201	G5	C323	F2	QD106	F16	R232	J8																
C202	G9	C324	F3	QD107	C15	R233	H7																
C203	G9	C325	F4	QD108	H13	R234	H7																
C204	H9	C401	H15	QD109	J13	R235	H7																
C206	H9	C402	H16	QD200	J4	R236	H7																
C207	H9	C403	H16	QD201	H4	R237	H7																
C208	H9	C404	H17	QD202	G3	R238	H5																
C209	G9	C405	H15	QD203	J5	R239	H5																
C211	G7	C406	G15	QD204	E10	R240	E9																
C212	G7	C407	H15	QD205	E10	R241	E7																
C213	G6	C408	H16	QD206	G5	R242	G5																
C214	H6	C409	H16	QD207	E8	R243	G5																
C215	H6	C410	H16	QD208	F8	R244	G5																
C216	H5	C411	H16	QD300	C10	R245	G4																
C217	G5	C412	H17	QD301	D4	R246	E7																
C218	J8	C413	H15	QD302	D13	R247	D7																
C219	H9	C414	H18	QD303	C5	R248	F8																
C220	H9	C415	G18	QD304	D13	R249	F8																
C221	G8	C416	F16	QD401	E17	R250	F8																
C222	G8	C417	G17	Q200	G8	R251	F7																
C223	G8	C418	F16	Q201	G8	R252	H7																
C224	G8	C419	F16	Q202	H7	R253	H9																
C225	G8	C420	G15	Q203	H8	R254	H9																
C226	G8	C421	F13	Q204	H8	R300	D5																
C227	H7	C422	J15	Q205	H8	R301	D5																
C228	G8	C423	F16	Q206	H8	R302	D2																
C229	G7	C424	H15	Q300	D2	R401	H15																
C230	G7	C425	J16	R101	J11	R402	G15																
C231	H7	C426	F17	R102	J11	R403	H15																
C232	G7	C427	J13	R103	J11	R405	G13																
C233	H4	C428	G13	R104	H11	R406	G13																
C234	G4	C429	F16	R105	H11	R407	G13																
C235	H5	C430	H15	R106	H11	R408	G13																
C236	E8	C431	H15	R107	H11	R409	G15																
C237	D8	GND	E5	R108	H11	R410	H15																
C238	G4	GND	H17	R109	E10	R411	H15																
C239	E10	GND	C16	R110	F11	R412	H15																
C240	H8	GND	H2	R111	E10	R413	G17																
C241	G5	GND	D2	R112	F10	R414	G17																

COMPONENT SIDE

Synthesizer 1 (902057)

CAPACITORS

C 101	C Solid Aluminium 33u 20% 10V Short Type	265105
C 102	C Solid Aluminium 33u 20% 10V Short Type	265105
C 103	C Solid Aluminium 33u 20% 10V Short Type	265105
C 104	C Solid Aluminium 33u 20% 10V Short Type	265105
C 105	C Solid Aluminium 33u 20% 10V Short Type	265105
C 106	C Solid Aluminium 33u 20% 10V Short Type	265105
C 107	C Ceramic 100n 20% 50V	213401
C 108	C Ceramic 100n 20% 50V	213401
C 109	C Ceramic 100n 20% 50V	213401
C 110	C Ceramic 100n 20% 50V	213401
C 111	C Ceramic 100n 20% 50V	213401
C 112	C Ceramic 100n 20% 50V	213401
C 113	C Ceramic 100n 20% 50V	213401
C 114	C Ceramic 100n 20% 50V	213401
C 115	C Ceramic 100n 20% 50V	213401
C 116	C Ceramic 100n 20% 50V	213401
C 117	C Ceramic 100n 20% 50V	213401
C 118	C Ceramic 100n 20% 50V	213401
C 119	C Ceramic 100n 20% 50V	213401
C 120	C Ceramic 100n 20% 50V	213401
C 121	C Ceramic 100n 20% 50V	213401
C 122	C Ceramic 100n 20% 50V	213401
C 123	C Ceramic 100n 20% 50V	213401
C 124	C Ceramic 100n 20% 50V	213401
C 200	C Ceramic 100n 20% 50V	213401
C 201	C Solid Aluminium 10u 20% 16V Short Type	265108
C 202	C Solid Aluminium 10u 20% 16V Short Type	265108
C 203	C Ceramic 100n 20% 50V	213401
C 204	MKT, 0.47/63/10, R:4.5*9*7.2, RM2	241073
C 206	Ceramic Chip NP0 18p0 10% 63V, size 1206	217040
C 207	Ceramic Chip NP0 2n2 5% 63V, size 1206	217038
C 208	Ceramic Chip NP0 47p 5% 63V, size 1206	217014
C 209	Ceramic Chip NP0 1n 5% 63V, size 1206	217005
C 211	Ceramic Chip NP0 1n 5% 63V, size 1206	217005
C 212	C Ceramic 100n 20% 50V	213401
C 213	C Solid Aluminium 10u 20% 16V Short Type	265108
C 214	Ceramic Chip NP0 1n 5% 63V, size 1206	217005
C 215	Ceramic Chip NP0 1n 5% 63V, size 1206	217005
C 216	C Solid Aluminium 10u 20% 16V Short Type	265108
C 217	C Ceramic 100n 20% 50V	213401
C 218	C Solid Aluminium 10u 20% 16V Short Type	265108
C 219	C Ceramic 100n 20% 50V	213401
C 220	Ceramic Chip NP0 47p 5% 63V, size 1206	217014
C 221	C Solid Aluminium 10u 20% 16V Short Type	265108
C 222	Ceramic Chip X7R 100n 20% 50V, size 1206	217006
C 223	Ceramic Chip X7R 100n 20% 50V, size 1206	217006
C 224	Ceramic Chip NP0 1n 5% 63V, size 1206	217005
C 225	Ceramic Chip NP0 10p 5% 63V, size 1206	217012
C 226	Ceramic Chip NP0 10p 5% 63V, size 1206	217012
C 227	C Ceramic 100n 20% 50V	213401

C 228	Ceramic Chip NP0 6p8 ±0p25 63V, size 1206	217018
C 229	Ceramic Chip NP0 100p 5% 63V, size 1206	217004
C 230	Ceramic Chip NP0 22p 5% 63V, size 1206	217003
C 231	Ceramic Chip NP0 1n 5% 63V, size 1206	217005
C 232	Ceramic Chip NP0 1n 5% 63V, size 1206	217005
C 233	C Ceramic 100n 20% 50V	213401
C 234	C Ceramic 100n 20% 50V	213401
C 235	C Ceramic 100n 20% 50V	213401
C 236	C Ceramic 100n 20% 50V	213401
C 237	C Ceramic 100n 20% 50V	213401
C 238	C Ceramic 100n 20% 50V	213401
C 239	C Ceramic 100n 20% 50V	213401
C 240	C Solid Aluminium 2u2 20% 25V Short Type	265102
C 241	C Ceramic 100n 20% 50V	213401
C 242	C Ceramic 100n 20% 50V	213401
C 243	C Solid Aluminium 10u 20% 16V Short Type	265108
C 244	C Solid Aluminium 10u 20% 16V Short Type	265108
C 245	C Ceramic 100n 20% 50V	213401
C 246	C Ceramic 100n 20% 50V	213401
C 247	C Ceramic 100n 20% 50V	213401
C 248	C Ceramic 100n 20% 50V	213401
C 249	C Ceramic 100n 20% 50V	213401
C 250	C Ceramic 100n 20% 50V	213401
C 251	C Ceramic 100n 20% 50V	213401
C 252	C Ceramic 100n 20% 50V	213401
C 253	C Ceramic 100n 20% 50V	213401
C 254	C Ceramic 100n 20% 50V	213401
C 255	Ceramic Chip X7R 100n 20% 50V, size 1206	217006
C 256	Ceramic Chip NP0 22p 5% 63V, size 1206	217003
C 300	C Ceramic 100n 20% 50V	213401
C 301	C Ceramic 100n 20% 50V	213401
C 303	C Ceramic 100n 20% 50V	213401
C 304	C Ceramic 100n 20% 50V	213401
C 305	C Ceramic 100n 20% 50V	213401
C 306	C Ceramic 100n 20% 50V	213401
C 307	C Ceramic 100n 20% 50V	213401
C 308	C Solid Aluminium 10u 20% 16V Short Type	265108
C 309	C Ceramic 100n 20% 50V	213401
C 310	C Ceramic 100n 20% 50V	213401
C 311	C Solid Aluminium 33u 20% 10V Short Type	265105
C 312	C Ceramic 100n 20% 50V	213401
C 313	C Ceramic 100n 20% 50V	213401
C 314	C Ceramic 100n 20% 50V	213401
C 315	C Ceramic 100n 20% 50V	213401
C 316	C Ceramic 100n 20% 50V	213401
C 317	C Solid Aluminium 10u 20% 16V Short Type	265108
C 318	C Solid Aluminium 10u 20% 16V Short Type	265108
C 319	C Ceramic 100n 20% 50V	213401
C 320	C Ceramic 100n 20% 50V	213401
C 321	C Solid Aluminium 33u 20% 10V Short Type	265105
C 323	C Ceramic 100n 20% 50V	213401
C 324	C Ceramic 100n 20% 50V	213401
C 325	C Solid Aluminium 10u 20% 16V Short Type	265108
C 401	Ceramic Chip NP0 270p 5% 63V, size 1206	217033

C 402	Ceramic Chip NP0 15p 5% 63V, size 1206	217002
C 403	Ceramic Chip NP0 47p 5% 63V, size 1206	217014
C 404	Ceramic Chip NP0 56p 5% 63V, size 1206	217030
C 407	Ceramic Chip NP0 150p 5% 63V, size 1206	217027
C 408	Ceramic Chip NP0 560p 5% 63V, size 1206	217045
C 409	Ceramic Chip NP0 560p 5% 63V, size 1206	217045
C 410	Ceramic Chip NP0 560p 5% 63V, size 1206	217045
C 411	Ceramic Chip NP0 560p 5% 63V, size 1206	217045
C 412	Ceramic Chip NP0 270p 5% 63V, size 1206	217033
C 413	C Ceramic 100n 20% 50V	213401
C 414	C Solid Aluminium 33u 20% 10V Short Type	265105
C 415	C Ceramic 100n 20% 50V	213401
C 416	C Solid Aluminium 33u 20% 10V Short Type	265105
C 417	C Ceramic 100n 20% 50V	213401
C 418	Ceramic Chip NP0 100p 5% 63V, size 1206	217004
C 419	C Ceramic 100n 20% 50V	213401
C 420	C Ceramic 100n 20% 50V	213401
C 421	C Ceramic 100n 20% 50V	213401
C 422	C Ceramic 100n 20% 50V	213401
C 423	C Solid Aluminium 33u 20% 10V Short Type	265105
C 424	C Ceramic 100n 20% 50V	213401
C 425	C Solid Aluminium 33u 20% 10V Short Type	265105
C 426	C Ceramic 100n 20% 50V	213401
C 427	C Ceramic 100n 20% 50V	213401
C 428	C Ceramic 100n 20% 50V	213401
C 429	C Solid Aluminium 33u 20% 10V Short Type	265105
C 430	C Ceramic 100n 20% 50V	213401
C 431	C Solid Aluminium 33u 20% 10V Short Type	265105

DIODES

CR 200	Diode general purpose BAS16 SOT23	352006
CR 201	Diode BBY40 variable capacitance diode 28V 50nA SOT23	352001
CR 202	Diode BBY40 variable capacitance diode 28V 50nA SOT23	352001
CR 205	Diode dual schottky HSMS-2812 SOT23	352003
CR 206	Diode zener BZX84-C3V9 SOT23	352009
CR 207	Diode general purpose BAS16 SOT23	352006
CR 401	IC TL431 ADJ. Precision Shunt Regulators	364849

CONNECTORS

J 300	DIN 41612 64 pol male 90°, C/2 class II	805958
J 401	Washer ø5/9x2,5	042525
J 401	Con SMB Angle Pcb Mounting 21,15mm	800330

CHOKES

L 200	Choke HF Mini 470uH 10% 124MA	703014
L 201	Choke HF Mini 470uH 10% 124MA	703014
L 202	Choke Mini 10u 5% 0.23A	703077
L 203	HF Coil 280nH Adjustable	740224
L 204	Chip Coil 1u 5%	703802
L 205	Chip Coil 1u 5%	703802
L 206	Chip Coil 1u 5%	703802

L 207	Chip Coil 1u 5%	703802
L 300	RF-choke six-hole core green	731204
L 301	RF-choke six-hole core green	731204
L 302	RF-choke six-hole core green	731204
L 303	RF-choke six-hole core green	731204
L 401	Chip Coil 1u 5%	703802
L 402	Chip Coil 1u 5%	703802
L 403	Chip Coil 1u 5%	703802
L 404	Chip Coil 1u 5%	703802
L 405	Choke Mini 10u 5% 0.23A	703077
L 406	Choke Mini 10u 5% 0.23A	703077
L 407	RF-choke six-hole core green	731204
L 408	Choke Mini 10u 5% 0.23A	703077

TRANSISTORS

Q 200	Transistor SST309 Jfet N-Channel SOT-23	361007
Q 201	Transistor SST309 Jfet N-Channel SOT-23	361007
Q 202	Transistor BC849C Sot23	361009
Q 203	Transistor BC849C Sot23	361009
Q 206	Transistor BC857B PNP SOT23	361010
Q 300	Transistor VN0106N3 Power Mos N-CH	360245

INTEGRATED ANALOG CIRCUITS

QA 200	IC LF356 op amp	364203
QA 201	IC LF356 op amp	364203
QA 202	IC MAR-4 Monolithic RF Amplifier	364823
QA 300	IC L7905CT - 5V regulator	364884
QA 301	IC LM2940T-5 L.dropout 5V Regulator	364883
QA 402	IC CX20202A-1 Dac 10Bit 160 MSPS	365146
QA 403	IC MAX9690CPA ECL Output Comparator	365112

INTEGRATED DIGITAL CIRCUITS

QD 101	IC Q2334C-50 Dual NCO 50 MSPS	366072
QD 102	IC 10H124 quad TTL-ECL	365947
QD 103	IC 10H124 quad TTL-ECL	365947
QD 104	IC 10H125 quad ECT.to TTL	364978
QD 105	IC 10H124 quad TTL-ECL	365947
QD 106	IC 10H124 quad TTL-ECL	365947
QD 108	IC 10H176 hex D ff	364936
QD 109	IC 10H176 hex D ff	364936
QD 200	IC 74F74 dual d ff	364845
QD 201	IC 74F00 Quad two inp.nand	364894
QD 202	IC 74F74 dual d ff	364845
QD 203	IC 10125 quad TTL-ECL buf	364482
QD 204	IC 10125 quad TTL-ECL buf	364482
QD 205	IC 74F74 dual d ff	364845
QD 206	IC 10116 tripl line rec.	364331
QD 207	IC 10H136 Universal Hex Counter	365009
QD 208	IC 10H116 Triple Line Receiver	364729
QD 300	RE125 902-057 QD300 Pal EP610	369373
QD 301	IC 74HC14 Hex Inv Schmitt Trigger SO-14	366009

QD 302	IC 4094 8-Stage Shift-And-Store Bus Reg SO-16	366011
QD 303	IC 74HC132 Quad 2-InP Nand Schmitt Tigger	364825
QD 304	IC 4094 8-Stage Shift-And-Store Bus Reg SO-16	366011
QD 401	IC 10H107 xor/xnor gate	365033

RESISTORS

R 101	Metal Film Chip 464E 1% 0.2W TC50	147035
R 102	Metal Film Chip 464E 1% 0.2W TC50	147035
R 103	Metal Film Chip 464E 1% 0.2W TC50	147035
R 104	Metal Film Chip 464E 1% 0.2W TC50	147035
R 105	Metal Film Chip 464E 1% 0.2W TC50	147035
R 106	Metal Film Chip 464E 1% 0.2W TC50	147035
R 107	Metal Film Chip 464E 1% 0.2W TC50	147035
R 108	Metal Film Chip 464E 1% 0.2W TC50	147035
R 109	Metal Film Chip 82E5 1% 0.2W TC50	147049
R 110	Metal Film Chip 147E 1% 0.2W TC50	147033
R 111	Metal Film Chip 82E5 1% 0.2W TC50	147049
R 112	Metal Film Chip 147E 1% 0.2W TC50	147033
R 113	Metal Film Chip 464E 1% 0.2W TC50	147035
R 114	Metal Film Chip 464E 1% 0.2W TC50	147035
R 115	Metal Film Chip 464E 1% 0.2W TC50	147035
R 116	Metal Film Chip 464E 1% 0.2W TC50	147035
R 117	Metal Film Chip 464E 1% 0.2W TC50	147035
R 200	Metal Film Chip 4K64 1% 0.2W TC50	147043
R 201	Metal Film Chip 4K64 1% 0.2W TC50	147043
R 202	Metal Film Chip 4K64 1% 0.2W TC50	147043
R 203	Metal Film Chip 46E4 1% 0.2W TC50	147016
R 204	Metal Film Chip 4K64 1% 0.2W TC50	147043
R 205	Metal Film Chip 3K16 1% 0.2W TC50	147055
R 206	Metal Film Chip 46E4 1% 0.2W TC50	147016
R 207	Metal Film Chip 825E 1% 0.2W TC50	147077
R 208	Metal Film Chip 147E 1% 0.2W TC50	147033
R 210	Metal Film Chip 1K00 1% 0.2W TC50	147040
R 211	Metal Film Chip 100E 1% 0.250W TC50	147014
R 212	Metal Film Chip 383E 1% 0.2W TC50	147058
R 213	Metal Film Chip 383E 1% 0.2W TC50	147058
R 214	Metal Film Chip 1K78 1% 0.2W TC50	147037
R 215	Metal Film Chip 178E 1% 0.2W TC50	147046
R 216	Metal Film Chip 178E 1% 0.2W TC50	147046
R 217	Metal Film Chip 1K78 1% 0.2W TC50	147037
R 218	Metal Film Chip 46E4 1% 0.2W TC50	147016
R 219	Metal Film Chip 46E4 1% 0.2W TC50	147016
R 220	Metal Film Chip 5K62 1% 0.2W TC50	147086
R 221	Metal Film Chip 100K 1% 0.2W TC50	147062
R 222	Metal Film Chip 3K83 1% 0.2W TC50	147064
R 223	Metal Film Chip 215E 1% 0.2W TC50	147109
R 224	Metal Film Chip 215E 1% 0.2W TC50	147109
R 225	Metal Film Chip 100K 1% 0.2W TC50	147062
R 226	Metal Film Chip 10K0 1% 0.2W TC50	147039
R 227	Metal Film Chip 31E6 1% 0.2W TC50	147075
R 228	Metal Film Chip 1K00 1% 0.2W TC50	147040
R 229	Metal Film Chip 10K0 1% 0.2W TC50	147039
R 230	Metal Film Chip 31E6 1% 0.2W TC50	147075

R 231	Metal Film Chip 1K78 1% 0.2W TC50	147037
R 232	Metal Film Chip 4K64 1% 0.2W TC50	147043
R 233	Metal Film Chip 1K47 1% 0.2W TC50	147080
R 234	Metal Film Chip 100K 1% 0.2W TC50	147062
R 235	Metal Film Chip 100K 1% 0.2W TC50	147062
R 236	Metal Film Chip 100K 1% 0.2W TC50	147062
R 237	Cermet Trimpot 47K 20% 0.5W TC70	182314
R 238	Metal Film Chip 464E 1% 0.2W TC50	147035
R 239	Metal Film Chip 464E 1% 0.2W TC50	147035
R 240	Metal Film Chip 464E 1% 0.2W TC50	147035
R 241	Metal Film Chip 464E 1% 0.2W TC50	147035
R 242	Metal Film Chip 215E 1% 0.2W TC50	147109
R 243	Metal Film Chip 464E 1% 0.2W TC50	147035
R 244	Metal Film Chip 464E 1% 0.2W TC50	147035
R 245	Metal Film Chip 147E 1% 0.2W TC50	147033
R 246	Metal Film Chip 464E 1% 0.2W TC50	147035
R 247	Metal Film Chip 464E 1% 0.2W TC50	147035
R 248	Metal Film Chip 464E 1% 0.2W TC50	147035
R 249	Metal Film Chip 464E 1% 0.2W TC50	147035
R 250	Metal Film Chip 1K00 1% 0.2W TC50	147040
R 251	Metal Film Chip 56E2 1% 0.2W TC50	147030
R 252	Metal Film Chip 21E5 1% 0.2W TC50	147052
R 253	Metal Film Chip 1K00 1% 0.2W TC50	147040
R 254	Metal Film Chip 3K16 1% 0.2W TC50	147055
R 300	Metal Film Chip 21K5 1% 0.2W TC50	147066
R 301	Metal Film Chip 21K5 1% 0.2W TC50	147066
R 302	Metal Film Chip 21K5 1% 0.2W TC50	147066
R 403	Metal Film Chip 51E1 1% 0.2W TC50	147029
R 405	Metal Film Chip 147E 1% 0.2W TC50	147033
R 406	Metal Film Chip 82E5 1% 0.2W TC50	147049
R 407	Metal Film Chip 147E 1% 0.2W TC50	147033
R 408	Metal Film Chip 82E5 1% 0.2W TC50	147049
R 410	Metal Film Chip 1K00 1% 0.2W TC50	147040
R 411	Metal Film Chip 1K47 1% 0.2W TC50	147080
R 412	Metal Film Chip 1K00 1% 0.2W TC50	147040
R 413	Metal Film Chip 51E1 1% 0.2W TC50	147029
R 414	Metal Film Chip 51E1 1% 0.2W TC50	147029
R 415	Metal Film Chip 464E 1% 0.2W TC50	147035
R 416	Metal Film Chip 46E4 1% 0.2W TC50	147016
R 417	Metal Film Chip 46E4 1% 0.2W TC50	147016
R 418	Metal Film Chip 46E4 1% 0.2W TC50	147016
R 419	Metal Film Chip 46E4 1% 0.2W TC50	147016
R 420	Metal Film Chip 46E4 1% 0.2W TC50	147016
R 421	Metal Film Chip 464E 1% 0.2W TC50	147035
R 422	Metal Film Chip 464E 1% 0.2W TC50	147035
R 423	Metal Film Chip 464E 1% 0.2W TC50	147035
R 424	Metal Film Chip 464E 1% 0.2W TC50	147035
R 425	Metal Film Chip 464E 1% 0.2W TC50	147035
R 426	Metal Film Chip 215E 1% 0.2W TC50	147109
R 427	Metal Film Chip 2K15 1% 0.2W TC50	147051
R 428	Metal Film Chip 46E4 1% 0.2W TC50	147016
R 429	Metal Film Chip 46E4 1% 0.2W TC50	147016
R 430	Metal Film Chip 46E4 1% 0.2W TC50	147016
R 431	Metal Film Chip 46E4 1% 0.2W TC50	147016

R 432	Metal Film Chip 46E4 1% 0.2W TC50	147016
R 433	Metal Film Chip 464E 1% 0.2W TC50	147035
R 434	Metal Film Chip 464E 1% 0.2W TC50	147035
R 435	Metal Film Chip 464E 1% 0.2W TC50	147035
R 436	Metal Film Chip 464E 1% 0.2W TC50	147035
R 437	Metal Film Chip 464E 1% 0.2W TC50	147035

TESTPOINTS

TP 200	Pin header 3 pol straight l:6.7mm with lock	805894
TP 201	Pin header 3 pol straight l:6.7mm with lock	805894
TP 202	Pin header 3 pol straight l:6.7mm with lock	805894
TP 203	Pin header 3 pol straight l:6.7mm with lock	805894
TP 401	Pin header 3 pol straight l:6.7mm with lock	805894
TP 402	Pin header 3 pol straight l:6.7mm with lock	805894

MISCELLANEOUS

	Screw Pozidrive panhead M2.5x8	008208
	Screw Pozidrive panhead M3x8	008308
	Screw Pozidrive Countersunk M2,5x20	009220
	Nut Rectangular M3 for to220	035909
	Tubular Rivet 2.5X10	060310
	Bushing ø8/2,8x13	066155
	Pin header 3 pol straight l:6.7mm with lock	805894
	Mounting Acc. for TO-220	816163
	Insulation Bushing F. TO-220	816214
	Solder Terminal 0.1 O2	823303
	L-piece for PCB	857041
	Cover Plate Middle for RE122	933089
	PCB For RE125 Synthesizer1	971491
	Labels For PCB With 72 Pcs Each Of Ark 48x7	980722
GND.1	Solder Terminal 0.1 O2	823303
GND.2	Solder Terminal 0.1 O2	823303
QAS402	Socket DIL 28 pol, h:4.95	816251
QDS101	Socket PLCC 68 pol	816305
QDS300	Socket DIL 24 pol, h:4.95 300mil	816274

10. SYNTHESIZER 2

10.1 Circuit Description

Fig. 10.1 shows the block diagram of Synthesizer 2.

The output from Synthesizer 2 is a signal covering the range from 90 to 270 MHz in 1 Hz steps.

Synthesizer 2 contains two phase-locked loops (PLL):

1 A Counter loop, covering the frequency range 80 to 250 MHz in 10 MHz steps.

2 A translation loop, adding a frequency, ranging from 10 to 20 MHz, to the frequency from the N-loop.

The 10 to 20 MHz signal is obtained directly from Synthesizer 1.

Finally, Synthesizer 2 contains an acquisition circuit.

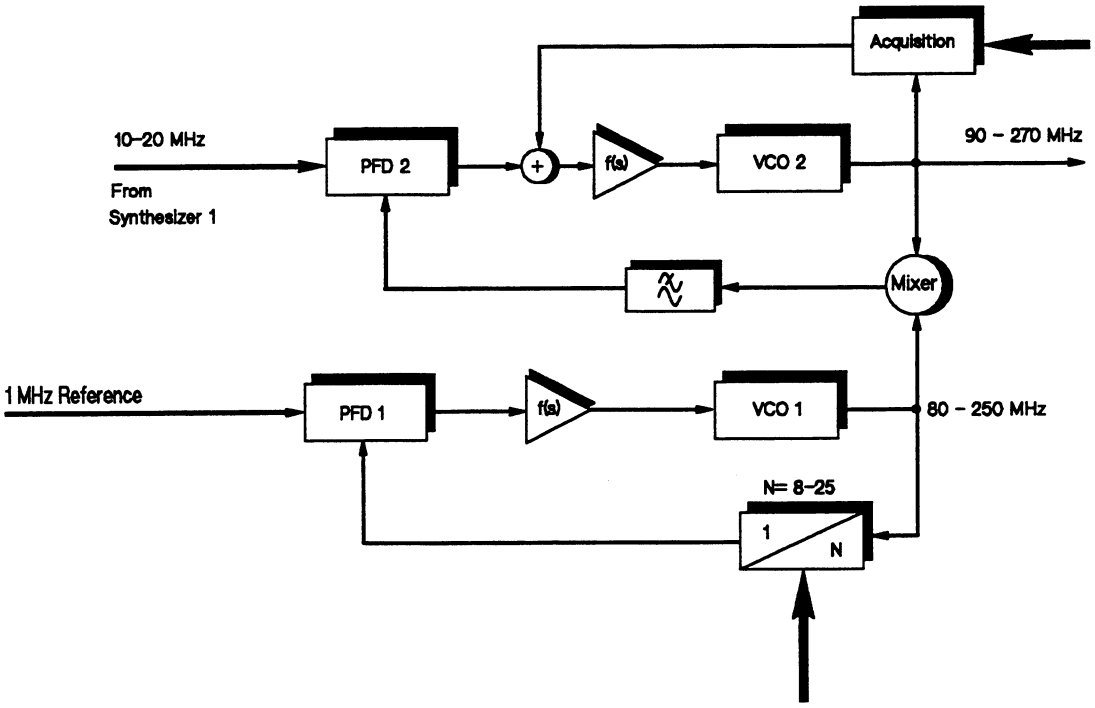

Fig. 10.1 - Block Diagram of Synthesizer 2

10.1.1 Counter Loop

The Counter Loop consists of:

A Voltage-Controlled Oscillator VCO 1, (80 to 250 MHz).

A Phase-Frequency Detector.

A Programmable Frequency Divider, (division ratio 80 to 250 in steps of 10).

A loop filter (integrator and LC filter).

A 10 MHz reference frequency is obtained from the Reference Oscillator.

10.1.2 Translation Loop

The translation loop consists of:

A Voltage-Controlled Oscillator VCO 2, (90 to 270 MHz).

A Mixer, where the signals Fvco 2 and Fvco 1 are mixed. Via a low-pass filter the difference signal (Fvco 2 - Fvco 1) is fed to PFD 2.

The input signal from the Synthesizer 1 is fed to PFD 2.

The output frequency from Synthesizer 2 is given by:

Fvco 2 = Fvco 1 + Fsynthesizer 1.

The output signal from PFD 2 is, via an Integrator and a low-pass filter, fed to the tuning varactors of VCO 2.

10.1.3 Acquisition Circuit

Refer to sheet 5 of the schematic diagram.

If the output from VCO 2 is lower in frequency than Fvco 1, the Acquisition Circuit forces VCO 2 to a higher frequency by sending current of proper polarity into the integrator of the translation loop. The Acquisition Circuit contains a frequency counter that counts the output frequency and compares the result to the data that sets the division ratio "N" in the counter loop.

Adjust the Acquisition Circuit using potentiometer R513 as described in section 10.2.3.

10.1.4 VCO 1 and VCO 2

The VCO 1 (sheet 4) and VCO 2 (sheet 2) are nearly identical.

Because of the relative wide frequency range of both VCOs, it is necessary to switch tank circuits in parallel, depending on the actual frequency. Low-loss RF switching diodes are used for tank coil switching. Non-linear networks, which compensate for the non-linear tuning characteristics of the VCOs, keep loop gain of the phase-locked loops nearly constant over the frequency range (sheets 3 and 1 of the schematic diagram). Furthermore, a switchable attenuator is included in the translation loop. This attenuator is switched synchronously with coil switching.

The levels of the VCO output signals are controlled by AGC loops, which act very quickly in order to ensure fast locking when the frequency is changed.

10.1.5 Divide by N Counter

The divide by N counter (division ratio N = 8 to 25) uses very fast ECL frequency counters.

For frequencies above 150 MHz divide by two prescalers are used because of the limited frequency range of the programmable frequency counters.

10.2 Adjustments

The following adjustments are described:

1 VCO 1
2 VCO 2
3 Acquisition Circuit

Mount Synthesizer 2 on extension board 901-885. You must connect the input signal from Synthesizer 1 using a suitable coaxial cable, RE code 618-085.

Please refer to the PCB layout for component locations.

Frequency setting of RE 125: 100 MHz.

Measure RF levels using Power meter.

10.2.1 VCO 1 (Counter Loop)

Adjust RF level to 0 dBm, measured on TP400 using potentiometer R429.

10.2.2 VCO 2 (Translation Loop)

Adjust RF level to -1.5 dBm measured on J200 (SMB connector on rear panel), using potentiometer R224.

10.2.3 Acquisition Circuit

Adjust the DC voltage measured on TP 500 (PCB location Z8) to -1 V $\pm$0.2 V using potentiometer R513.

When troubleshooting, it may be suitable to disconnect the acquisition signal by short-circuiting TP500.

10.3 Schematic Diagrams

The schematic diagram for Synthesizer 2 is located in the following. The diagram number is 985-449. The diagram number for the prescaler is 985-671.

10.4 Component Locations

The component locations on Synthesizer 2 and the prescaler are shown in the following.

10.5 Parts List

A copy of the parts list from production documentation is located in the following. The code number of the assembled PCB is 902-058, and the code number of the prescaler is 902-323.

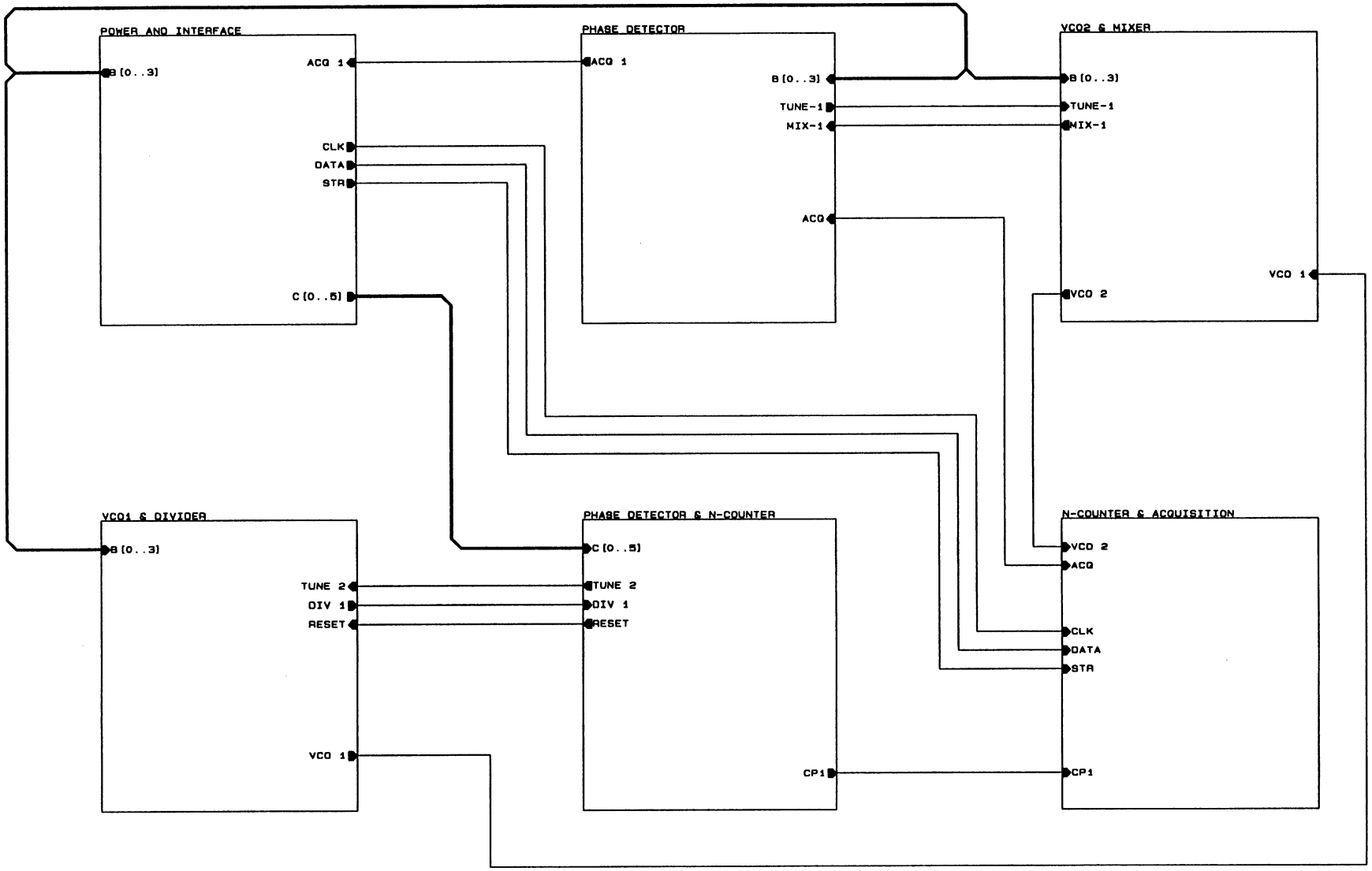

RE TECHNOLOGY AS

RE125 SIGNAL GENERATOR
SYNTHESIZER 2

Title
ROOT SHEET

Size	Document Number	REV
A	902-058 971-401 985-449	7b

Date: December 1, 1993 Sheet 1 of 7

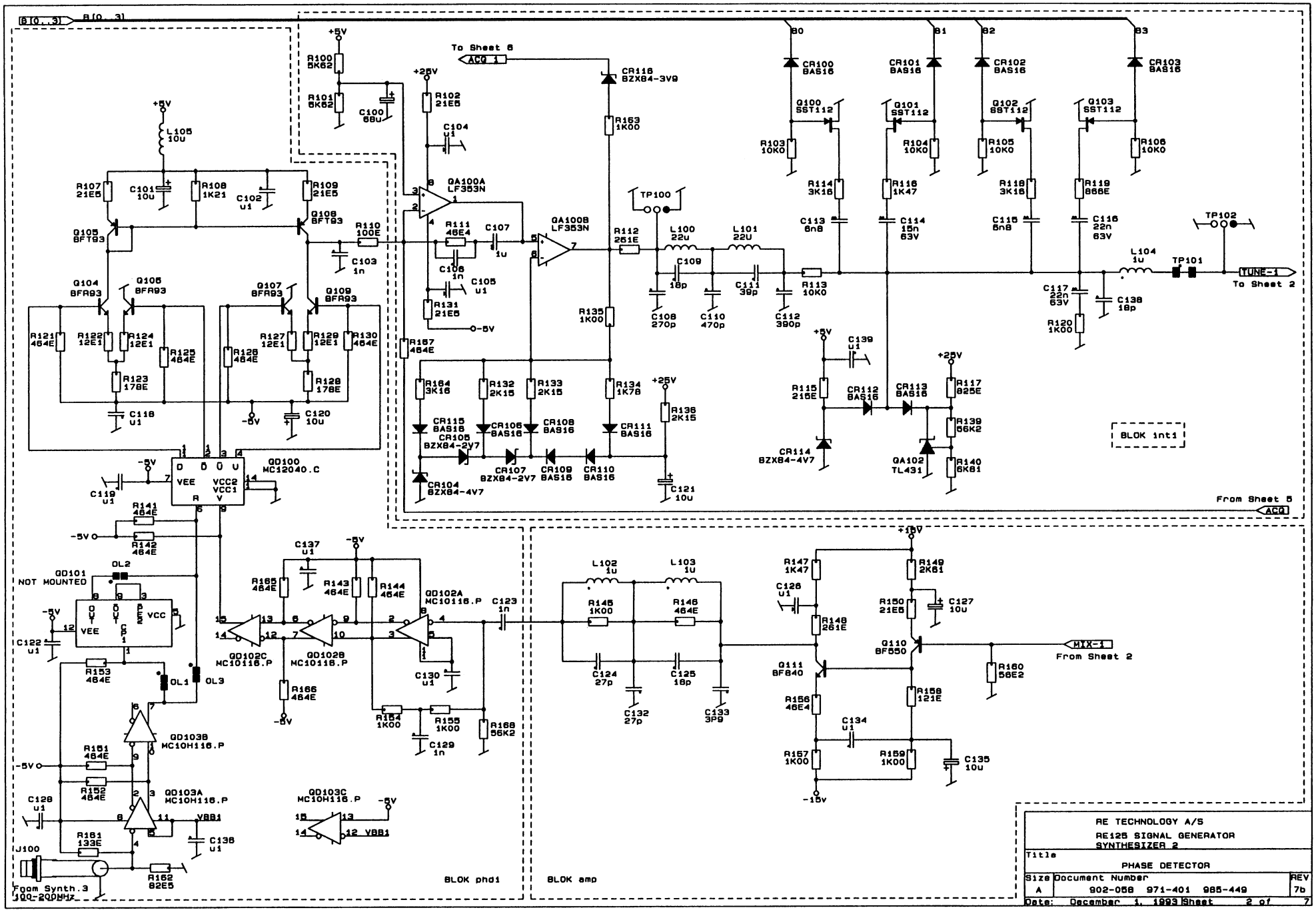
B[0..3]
To Sheet 6
ACQ 1
QA100A LF353N
QA100B LF353N
TP100
TP102
TP101
TUNE-1
To Sheet 2
BLOK int1
From Sheet 5
ACQ
QD100 MC12040.C
QD101 NOT MOUNTED
QD102A MC10116.P
QD102B MC10116.P
QD102C MC10116.P
QD103A MC10H116.P
QD103B MC10H116.P
QD103C MC10H116.P
J100
Foam Synth.3 100-200MHz
BLOK phd1
BLOK amp
MIX-1
From Sheet 2
RE TECHNOLOGY A/S
RE125 SIGNAL GENERATOR
SYNTHESIZER 2
Title
PHASE DETECTOR
Size
A
Document Number
902-058 971-401 985-449
REV
7b
Date: December 1, 1993
Sheet 2 of 7

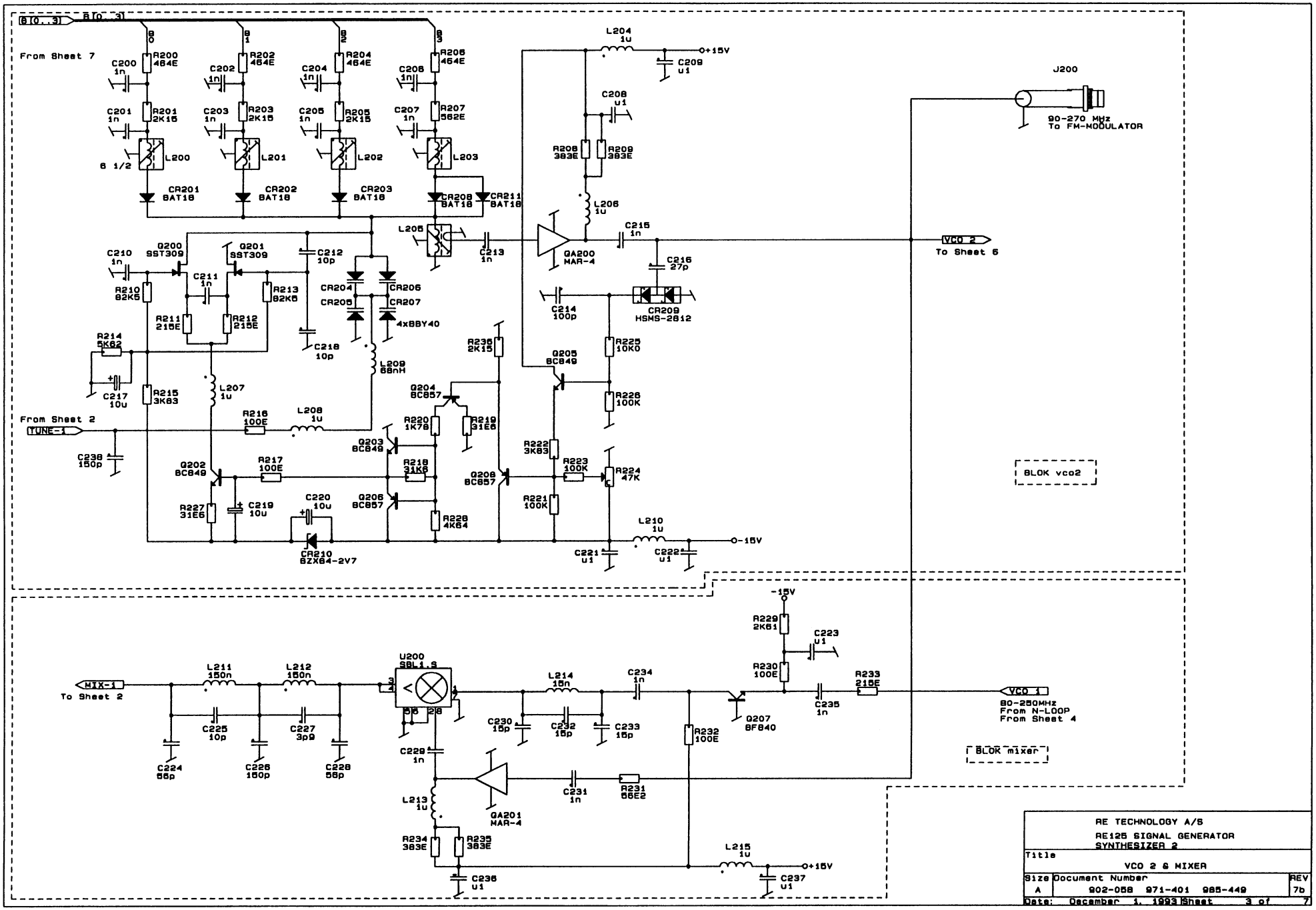
B[0..3]
From Sheet 7
R200 464E
R202 464E
R204 464E
R206 464E
C200 1n
C202 1n
C204 1n
C206 1n
C201 1n
C203 1n
C205 1n
C207 1n
R201 2K15
R203 2K15
R205 2K15
R207 562E
L200
L201
L202
L203
6 1/2
CR201 BAT18
CR202 BAT18
CR203 BAT18
CR208 BAT18
CR211 BAT18
L204 1u
+15V
C209 u1
C208 u1
R208 383E
R209 383E
L206 1u
J200
90-270 MHz
To FM-MODULATOR
L205
C213 1n
QA200 MAR-4
C215 1n
C216 27p
VCO 2
To Sheet 6
C214 100p
CR209 HSMS-2812
C210 1n
Q200 SST309
Q201 SST309
C211 1n
R210 82K5
R213 82K5
R211 215E
R212 215E
C212 10p
CR204
CR206
CR205
CR207
4xBBY40
C218 10p
L209 68nH
R214 5K62
C217 10u
R215 3K83
L207 1u
R236 2K15
Q205 BC849
R225 10K0
R226 100K
Q204 BC857
R219 31E6
From Sheet 2
TUNE-1
R216 100E
L208 1u
R220 1K78
Q203 BC849
R222 3K83
R223 100K
R224 47K
C238 150p
Q202 BC849
R217 100E
R218 31K6
Q208 BC857
R221 100K
R227 31E6
C219 10u
C220 10u
Q206 BC857
R228 4K64
L210 1u
-15V
CR210 BZX64-2V7
C221 u1
C222 u1
BLOK vco2
-15V
R229 2K61
C223 u1
R230 100E
R233 215E
MIX-1
To Sheet 2
L211 150n
L212 150n
U200 SBL1.5
L214 15n
C234 1n
VCO 1
80-250MHz
From N-LOOP
From Sheet 4
C235 1n
Q207 BF840
C225 10p
C227 3p9
C230 15p
C232 15p
C233 15p
R232 100E
C224 56p
C226 150p
C228 56p
C229 1n
C231 1n
R231 66E2
L213 1u
QA201 MAR-4
R234 383E
R235 383E
L215 1u
+15V
C236 u1
C237 u1
BLOK mixer
RE TECHNOLOGY A/S
RE125 SIGNAL GENERATOR
SYNTHESIZER 2
Title
VCO 2 & MIXER
Size
A
Document Number
902-058 971-401 985-449
REV
7b
Date: December 1, 1993
Sheet 3 of 7

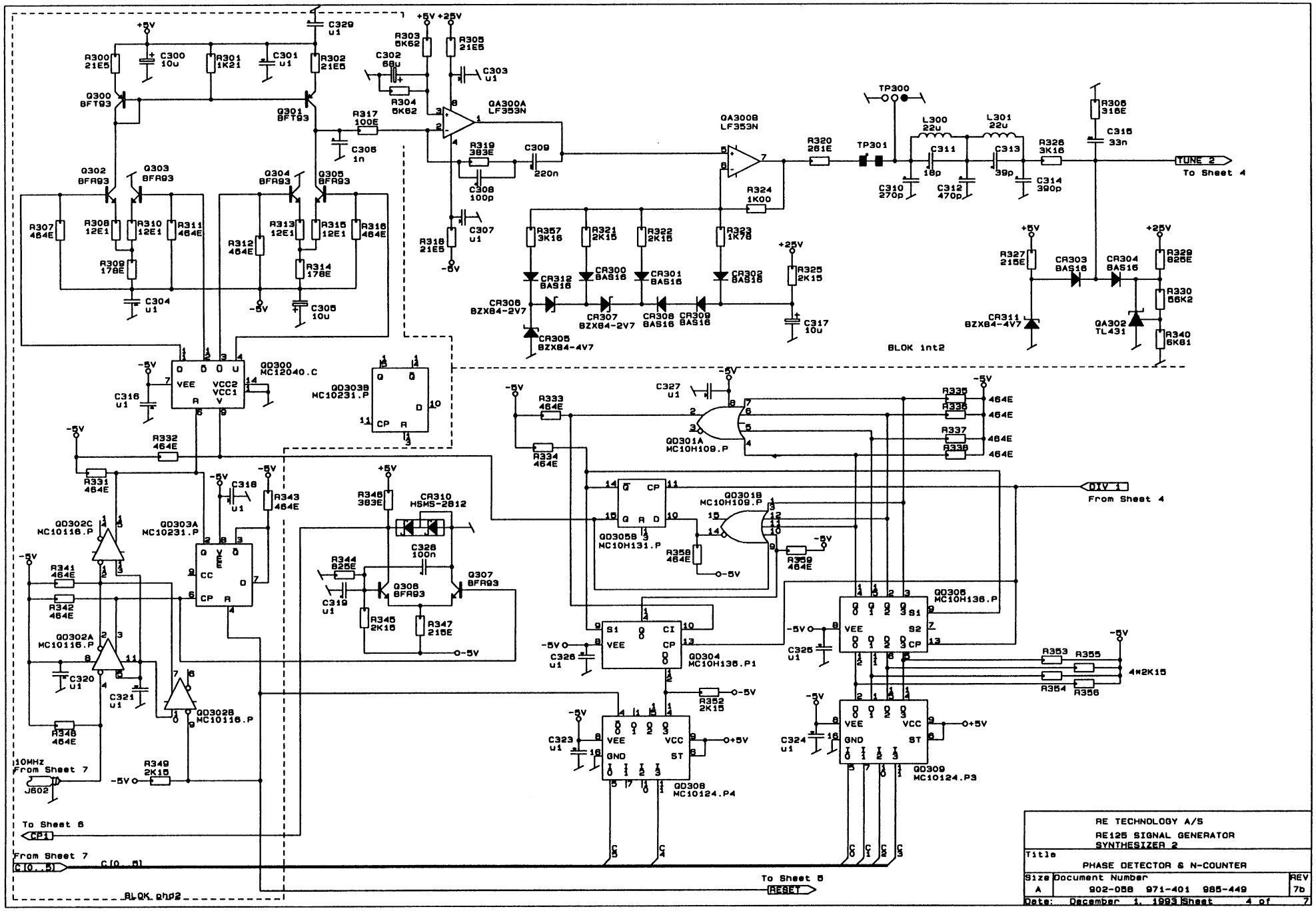
RE TECHNOLOGY A/S
RE125 SIGNAL GENERATOR
SYNTHESIZER 2
Title
PHASE DETECTOR & N-COUNTER
Size A
Document Number 902-058 971-401 985-449
REV 7b
Date: December 1, 1993 Sheet 4 of 7
TUNE 2
To Sheet 4
DIV 1
From Sheet 4
10MHz
From Sheet 7
J602
To Sheet 6
CP1
From Sheet 7
C[0..5]
To Sheet 5
RESET
BLOK 1nt2
BLOK 0nt2
QA300A LF353N
QA300B LF353N
QD300 MC12040.C
QD303B MC10231.P
QD301A MC10H109.P
QD301B MC10H109.P
QD305B MC10H131.P
QD304 MC10H136.P1
QD305 MC10H136.P
QD308 MC10124.P4
QD309 MC10124.P3
QD302C MC10116.P
QD303A MC10231.P
QD302A MC10116.P
QD302B MC10116.P
QA302 TL431
CR310 HSMS-2812
TP300
TP301
4*2K15

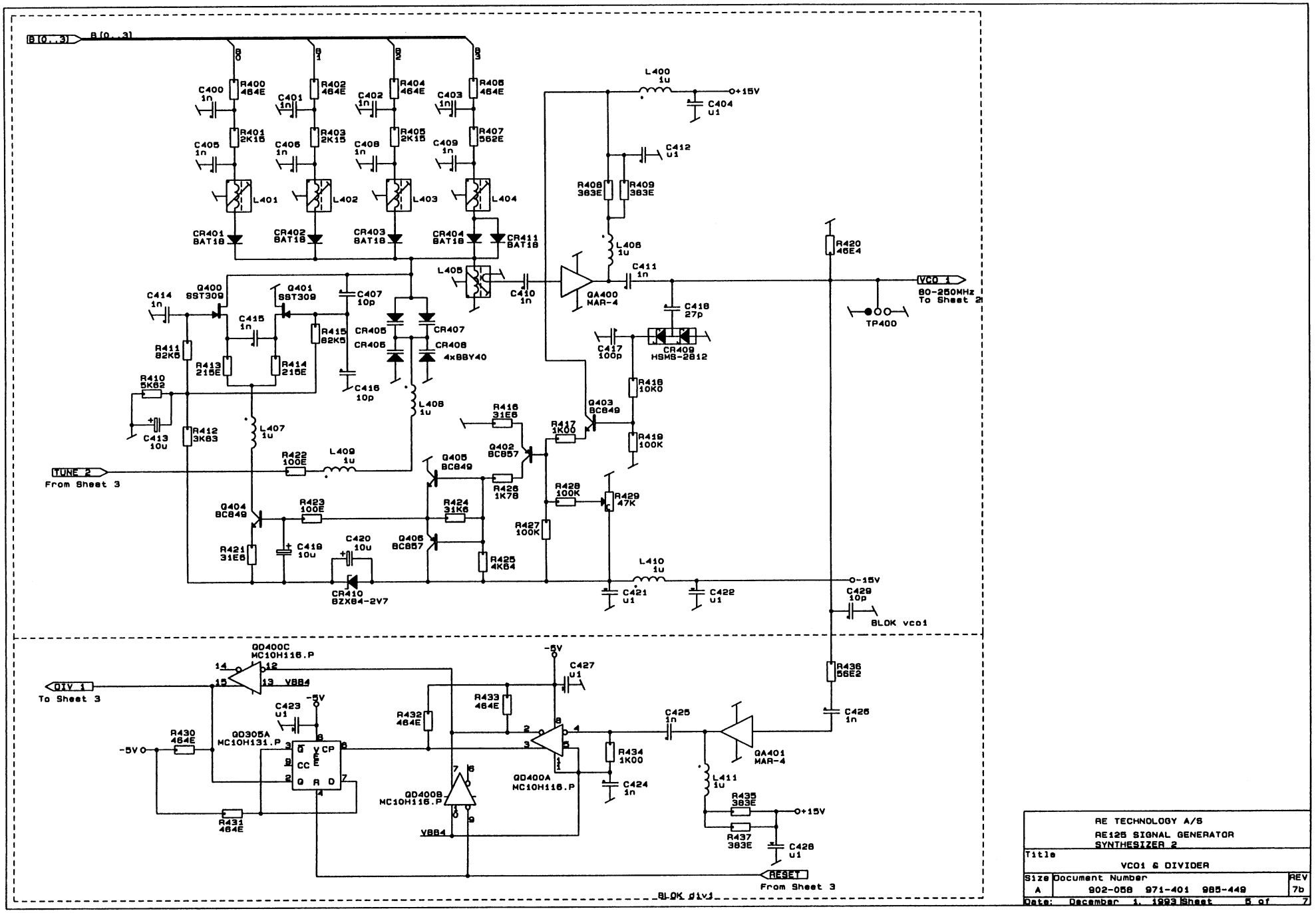

RE TECHNOLOGY A/S
RE125 SIGNAL GENERATOR
SYNTHESIZER 2

Title: VCO1 & DIVIDER

Size	Document Number	REV
A	902-058 971-401 985-449	7b

Date: December 1, 1993 Sheet 5 of 7

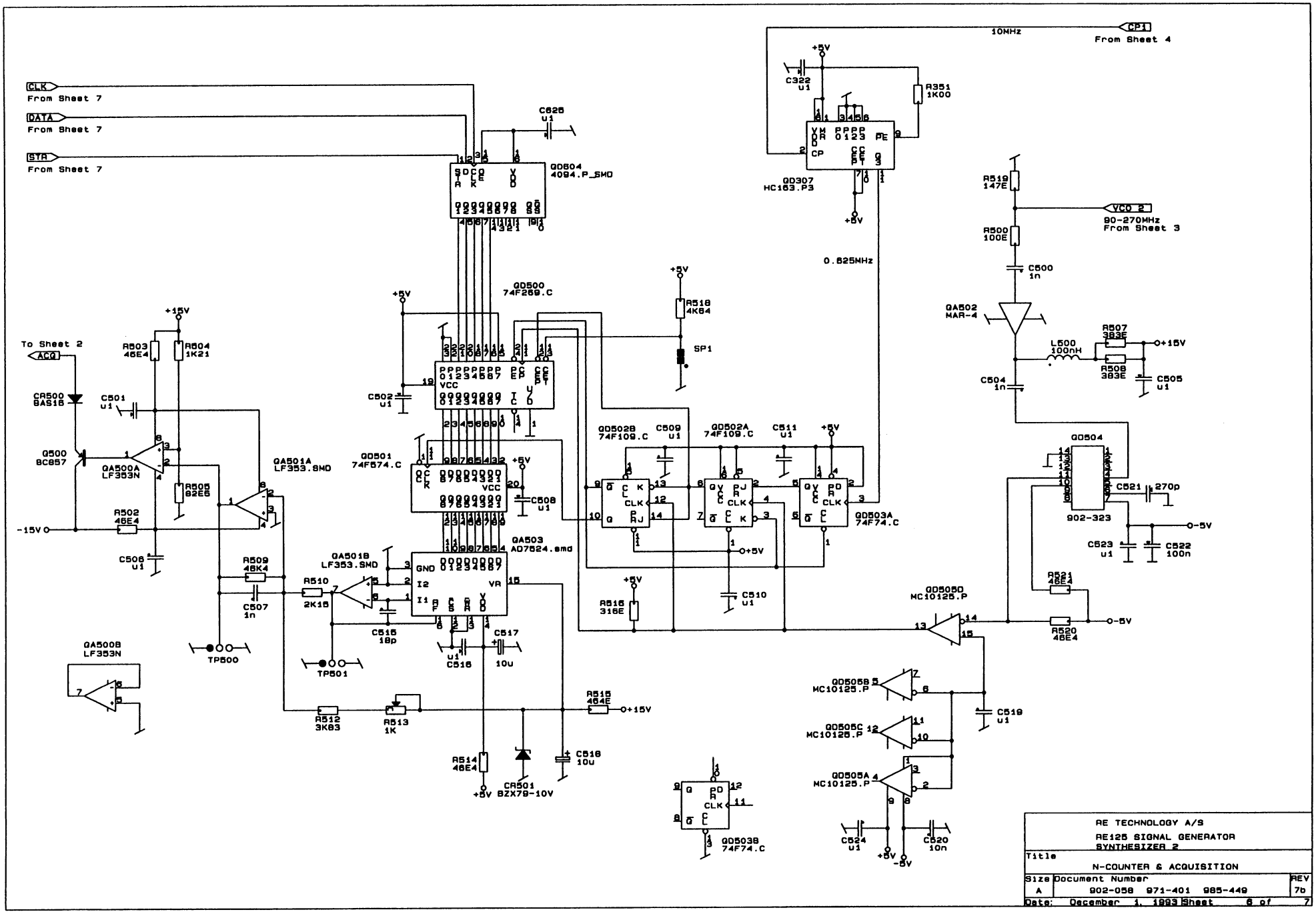

RE TECHNOLOGY A/S

RE125 SIGNAL GENERATOR
SYNTHESIZER 2

Title: N-COUNTER & ACQUISITION

Size	Document Number	REV
A	902-058 971-401 985-449	7b

Date: December 1, 1993 Sheet 6 of 7

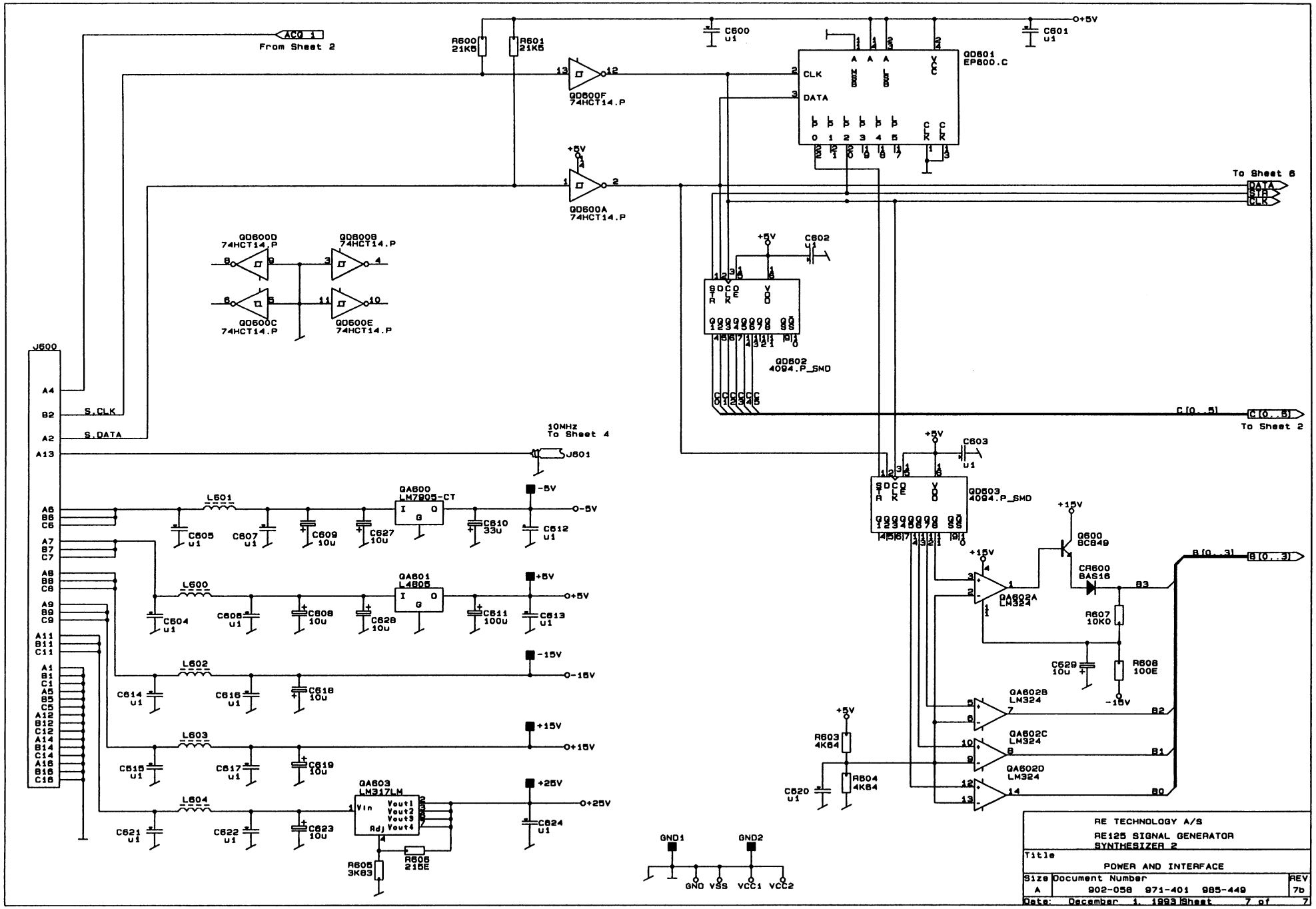
ACQ 1
From Sheet 2
R600 21K5
R601 21K5
C600 u1
C601 u1
+5V
QD601 EP600.C
CLK
DATA
QD600F 74HCT14.P
QD600A 74HCT14.P
To Sheet 6
DATA
STB
CLK
QD600D 74HCT14.P
QD600B 74HCT14.P
QD600C 74HCT14.P
QD600E 74HCT14.P
C602 u1
QD602 4094.P_SMD
C[0..5]
To Sheet 2
J600
S.CLK
S.DATA
10MHz To Sheet 4
J601
C603 u1
QD603 4094.P_SMD
+15V
Q600 BC849
CR600 BAS16
B[0..3]
QA600 LM7905-CT
QA601 LM805
QA602A LM324
QA602B LM324
QA602C LM324
QA602D LM324
R607 10K0
R608 100E
C629 10u
-15V
R603 4K64
R604 4K64
C620 u1
QA603 LM317LM
R605 3K83
R606 215E
GND1
GND2
GND VSS VCC1 VCC2
RE TECHNOLOGY A/S
RE125 SIGNAL GENERATOR
SYNTHESIZER 2
Title
POWER AND INTERFACE
Size A
Document Number 902-058 971-401 985-449
REV 7b
Date: December 1, 1993 Sheet 7 of 7

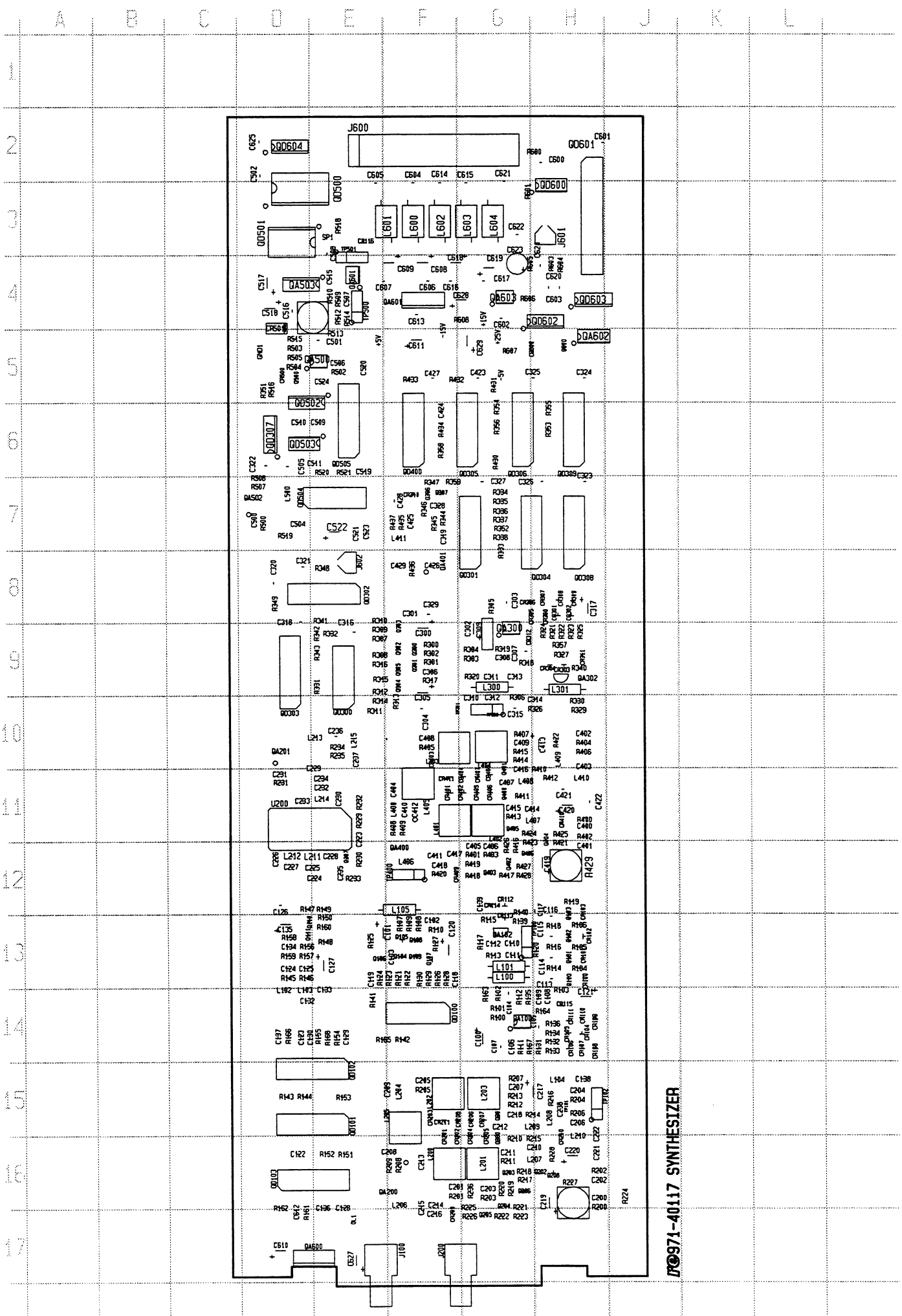
M0971-40117 SYNTHESIZER

COMP	LOC	COMP	LOC	COMP	LOC	COMP	LOC	COMP	LOC	COMP	LOC	COMP	LOC	COMP	LOC	COMP	LOC	COMP	LOC	COMP	LOC	COMP	LOC
+5V	E5	C115	H13	C312	G10	C606	F4	QA201	D10	Q500	D5	R206	H15	R346	F7	R607	G5						
+15V	G4	C116	H12	C313	G9	C607	E4	QA300	G9	Q600	H5	R207	G15	R347	F7	R608	G4						
+25V	G5	C117	H12	C314	H10	C608	F4	QA302	H9	R100	G14	R208	F16	R348	E8	SP1	E3						
-5V	G5	C118	F13	C315	G10	C609	F4	QA400	F12	R101	G14	R209	E16	R349	D8	TP100	H13						
-15V	F5	C119	E13	C316	E9	C610	D17	QA401	F8	R102	G13	R210	G16	R351	D5	TP101	H15						
CR100	H14	C120	F13	C317	H8	C611	F5	QA500	D5	R103	H14	R211	G16	R352	G7	TP102	H15						
CR101	H13	C121	H14	C318	D8	C612	D16	QA501	E4	R104	H13	R212	G15	R353	H6	TP300	G10						
CR102	H13	C122	D16	C319	F7	C613	F4	QA502	D7	R105	H13	R213	G15	R354	G6	TP301	F10						
CR103	H13	C123	D14	C320	D8	C614	F2	QA503	E4	R106	H13	R214	G15	R355	H6	TP400	F12						
CR104	H14	C124	D13	C321	D8	C615	G2	QA600	E17	R107	F13	R215	G16	R356	G6	TP500	E4						
CR105	H14	C125	D13	C322	D6	C616	F4	QA601	F4	R108	F13	R216	H15	R357	H9	TP501	E3						
CR106	H14	C126	D12	C323	H6	C617	G4	QA602	H5	R109	F13	R217	G16	R358	F6	U200	D11						
CR107	H14	C127	E13	C324	H5	C618	G4	QA603	G4	R110	F13	R218	G16	R359	F7								
CR108	H14	C128	E17	C325	H5	C619	G4	QD100	F14	R111	G14	R219	G16	R400	H11								
CR109	H14	C129	E14	C326	H7	C620	H4	QD101	E15	R112	G14	R220	G16	R401	G12								
CR110	H14	C130	D14	C327	G7	C621	G2	QD102	E15	R113	G13	R221	G17	R402	H11								
CR111	H14	C132	E14	C328	F7	C622	G3	QD103	D16	R114	H13	R222	G17	R403	G12								
CR112	G12	C133	E13	C329	F8	C623	G3	QD300	E10	R115	G13	R223	G17	R404	H10								
CR113	G12	C134	D13	C400	H11	C624	H4	QD301	G8	R116	H13	R224	J16	R405	F10								
CR114	G12	C135	D13	C401	H12	C625	D2	QD302	E8	R117	G13	R225	G17	R406	H10								
CR115	H14	C136	E17	C402	H10	C627	E17	QD303	D10	R118	H13	R226	G17	R407	G10								
CR116	E3	C137	D14	C403	H10	C628	F4	QD304	H8	R119	H12	R227	H16	R408	F11								
CR201	F15	C138	H15	C404	F11	C629	G5	QD305	G7	R120	G13	R228	H16	R409	F11								
CR202	F15	C139	G12	C405	G12	GND1	D5	QD306	G7	R121	F13	R229	E11	R410	G11								
CR203	F15	C200	H16	C406	G12	J100	F17	QD307	D6	R122	F13	R230	E12	R411	G11								
CR204	G15	C201	F16	C407	G11	J200	F17	QD308	H8	R123	E13	R231	D11	R412	H11								
CR205	G15	C202	H16	C408	F10	J600	E2	QD309	H7	R124	E13	R232	E11	R413	G11								
CR206	G15	C203	G16	C409	G10	J601	H3	QD400	F6	R125	E13	R233	E12	R414	G10								
CR207	G15	C204	H15	C410	F11	J602	E8	QD500	E3	R126	F13	R234	E10	R415	G10								
CR208	F15	C205	F15	C411	F12	L100	G13	QD501	D3	R127	F13	R235	E10	R416	G11								
CR209	F16	C206	H15	C412	F11	L101	G13	QD502	E5	R128	F13	R236	G16	R417	G12								
CR210	H15	C207	G15	C413	H10	L102	D14	QD503	E6	R129	F13	R300	F9	R418	G12								
CR211	F15	C208	F16	C414	H11	L103	D14	QD504	D7	R130	F13	R301	F9	R419	G12								
CR300	H8	C209	E15	C415	G11	L104	H15	QD505	E6	R131	H14	R302	F9	R420	F12								
CR301	H8	C210	H16	C416	G11	L105	F12	QD600	H3	R132	H14	R303	G9	R421	H12								
CR302	H8	C211	G16	C417	G12	L200	F16	QD601	H2	R133	H14	R304	G9	R422	H10								
CR303	H9	C212	G15	C418	F12	L201	G16	QD602	H4	R134	H14	R305	G8	R423	H11								
CR304	H9	C213	F16	C419	H12	L202	F15	QD603	H4	R135	G14	R306	G10	R424	G11								
CR305	G8	C214	F16	C420	H11	L203	G15	QD604	D2	R136	H14	R307	E9	R425	H11								
CR306	H8	C215	F16	C421	H11	L204	F15	Q100	H13	R139	G13	R308	E9	R426	G11								
CR307	H8	C216	F17	C422	H11	L205	E15	Q101	H13	R140	G12	R309	E9	R427	G12								
CR308	H8	C217	H15	C423	G5	L206	F16	Q102	H13	R141	E14	R310	E9	R428	G12								
CR309	H8	C218	G15	C424	F6	L207	G16	Q103	H13	R142	F14	R311	E10	R429	H12								
CR310	F7	C219	H17	C425	F7	L208	H15	Q104	F13	R143	D15	R312	E9	R430	G6								
CR311	H9	C220	H16	C426	F8	L209	G15	Q105	F13	R144	D15	R313	F9	R431	G5								
CR312	G9	C221	H16	C427	F5	L210	H16	Q106	E13	R145	D13	R314	E10	R432	F5								
CR401	F11	C222	H16	C428	F7	L211	E12	Q107	F13	R146	D13	R315	E9	R433	F5								
CR402	F11	C223	E11	C429	F8	L212	D12	Q108	F13	R147	E12	R316	E9	R434	F6								
CR403	F10	C224	E12	C500	D7	L213	E10	Q109	F13	R148	E13	R317	F9	R435	F7								
CR404	G11	C225	E12	C501	E5	L214	E11	Q110	D13	R149	E12	R318	G9	R436	F8								
CR405	G11	C226	D12	C502	D3	L215	E10	Q111	D13	R150	E13	R319	G9	R437	F7								
CR406	G11	C227	D12	C504	D7	L300	G9	Q200	G16	R151	E16	R320	G9	R500	D7								
CR407	G11	C228	E12	C505	D6	L301	H9	Q201	G15	R152	E16	R321	H9	R502	E5								
CR408	G11	C229	D11	C506	E5	L400	F11	Q202	H16	R153	E15	R322	H9	R503	D5								
CR409	F12	C230	E11	C507	E4	L401	F11	Q203	G16	R154	E14	R323	H9	R504	D5								
CR410	H11	C231	D11	C508	E4	L402	G12	Q204	G16	R155	E14	R324	H9	R505	D5								
CR411	F11	C232	E11	C509	E6	L403	F10	Q205	G17	R156	E13	R325	H9	R507	D7								
CR500	D5	C233	D11	C510	D6	L404	G10	Q206	G16	R157	D13	R326	H10	R508	D6								
CR501	D4	C234	E11	C511	E6	L405	F11	Q207	E12	R158	D13	R327	H9	R509	E4								
CR600	G5	C235	E12	C515	E4	L406	F12	Q208	H16	R159	D13	R329	H10	R510	E4								
C100	G14	C236	E10	C516	D4	L407	G11	Q300	F9	R160	E13	R330	H10	R512	E4								
C101	E13	C237	E10	C517	D4	L408	G11	Q301	F9	R161	D17	R331	E9	R513	E5								
C102	F13	C238	H15	C518	D4	L409	H10	Q302	F9	R162	D17	R332	E9	R514	E4								
C103	F13	C300	F9	C519	E6	L410	H11	Q303	F8	R163	G14	R333	G7	R515	D5								
C104	G14	C301	F8	C520	E5	L411	F7	Q304	F9	R164	H14	R334	G7	R516	D5								
C105	G14	C302	G9	C521	E7	L500	D7	Q305	F9	R165	F14	R335	G7	R518	E3								
C106	G14	C303	G8	C522	E7	L600	F3	Q306	F7	R166	D14	R336	G7	R519	D7								
C107	G14	C304	F10	C523	E7	L601	F3	Q307	F7	R167	G14	R337	G7	R520	E6								
C108	H14	C305	F9	C524	E5	L602	F3	Q400	G11	R168	E14	R338	G7	R521	E6								
C109	H14	C306	F9	C600	H2	L603	G3	Q401	G11	R200	H16	R340	H9	R600	G2								
C110	G13	C307	G9	C601	J2	L604	G3	Q402	G12	R201	F16	R341	E9	R601	G3								
C111	G13	C308	G9	C602	G4	OL1	E17	Q403	G12	R202	H16	R342	E9	R603	H4								
C112	G13	C309	G9	C603	H4	QA100	G14	Q404	H11	R203	G16	R343	E9	R604	H4								
C113	H13	C310	G10	C604	F2	QA102	G13	Q405	G11	R204	H15	R344	F7	R605	G4								
C114	H13	C311	G9	C605	E2	QA200	F16	Q406	G12	R205	F15	R345	F7	R606	G4								

COMPONENT SIDE

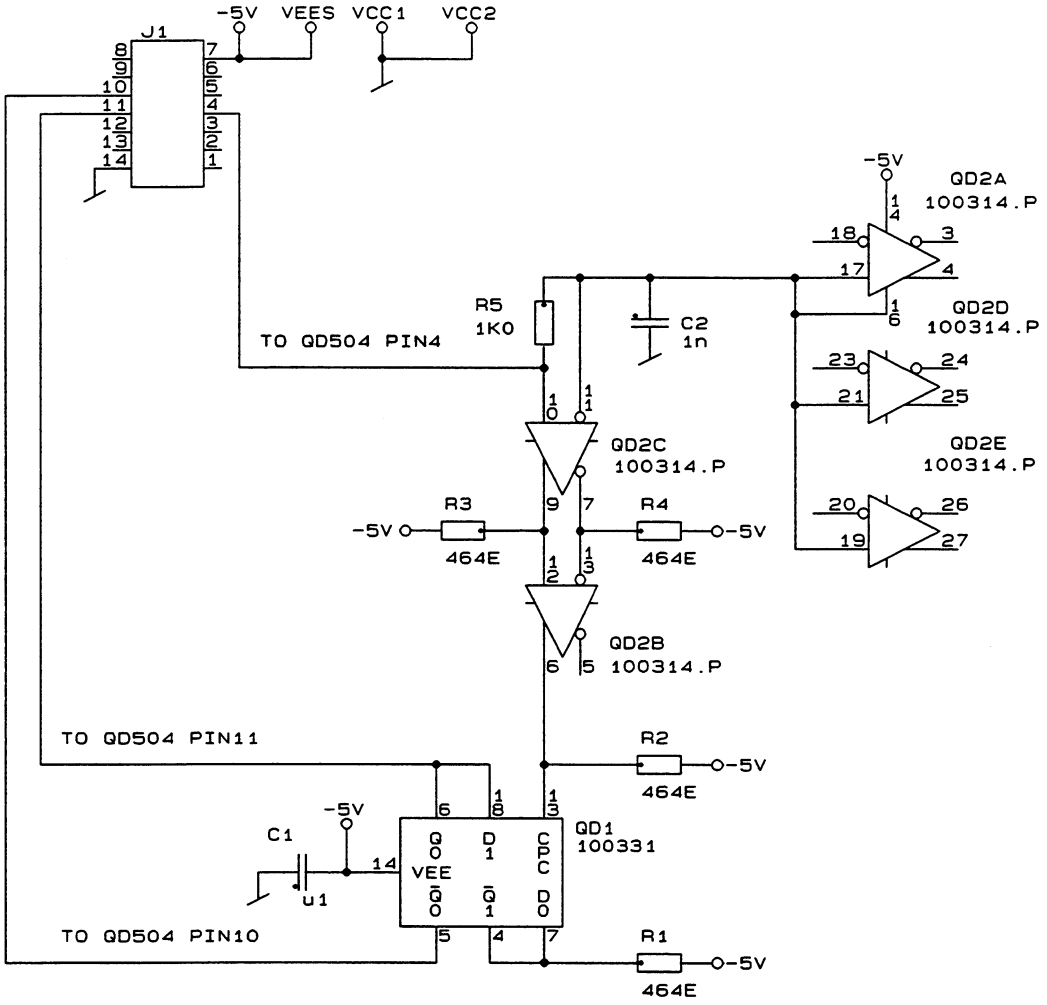

RE TECHNOLOGY A/S

RE122/125 SIGNAL GENERATOR
SYNTHESIZER 2/4

Title

PIGGY BACK FOR PRE-SCALER

Size	Document Number	REV
A	902-323 971-752 985-671	2a

Date: July 6, 1994 Sheet 1 of 1

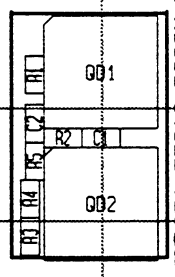

70971-75212 PIGGY BACK

COMP	LOC	COMP	LOC	COMP	LOC	COMP	LOC	COMP	LOC	COMP	LOC	COMP	LOC	COMP	LOC	COMP	LOC	COMP	LOC	COMP	LOC	COMP	LOC
C1	F10																						
C2	F10																						
QD1	F9																						
QD2	F10																						
R1	F9																						
R2	F10																						
R3	F11																						
R4	F10																						
R5	F10																						

COMPONENT SIDE

971-75212

Synthesizer 2 (902058)

CAPACITORS

C 100	C Solid Aluminium 68u 20% 6v3 Short Type	265111
C 101	C Solid Aluminium 10u 20% 16V Short Type	265108
C 102	Ceramic Chip X7R 100n 20% 50V, size 1206	217006
C 103	Ceramic Chip NP0 1n 5% 63V, size 1206	217005
C 104	C Ceramic 100n 20% 50V	213401
C 105	C Ceramic 100n 20% 50V	213401
C 106	Ceramic Chip NP0 1n 5% 63V, size 1206	217005
C 107	MKT, 1/50/10, R:5.5*10*4.6, RM1	241125
C 108	Ceramic Chip NP0 270p 5% 63V, size 1206	217033
C 109	Ceramic Chip NP0 18p0 10% 63V, size 1206	217040
C 110	Ceramic Chip NP0 470p 5% 63V, size 1206	217024
C 111	Ceramic Chip NP0 39p 5% 63V, size 1206	217035
C 112	Ceramic Chip NP0 390p 5% 63V, size 1206	217037
C 113	MKT 0.0068/63/10 R:2.5*7*4.6 RM1	241093
C 114	MKT, 0.015/63/10, R:2.5*7*4.6, RM1	241099
C 115	MKT 0.0068/63/10 R:2.5*7*4.6 RM1	241093
C 116	MKT, 0.022/63/10, R:2.5*7*4.6, RM1	241098
C 117	MKT, 0.022/63/10, R:2.5*7*4.6, RM1	241098
C 118	Ceramic Chip X7R 100n 20% 50V, size 1206	217006
C 119	Ceramic Chip X7R 100n 20% 50V, size 1206	217006
C 120	C Solid Aluminium 10u 20% 16V Short Type	265108
C 121	C Solid Aluminium 10u 20% 16V Short Type	265108
C 122	Ceramic Chip X7R 100n 20% 50V, size 1206	217006
C 123	Ceramic Chip NP0 1n 5% 63V, size 1206	217005
C 124	Ceramic Chip NP0 27p 5% 63V, size 1206	217021
C 125	Ceramic Chip NP0 18p0 10% 63V, size 1206	217040
C 126	C Ceramic 100n 20% 50V	213401
C 127	C Solid Aluminium 10u 20% 16V Short Type	265108
C 128	Ceramic Chip X7R 100n 20% 50V, size 1206	217006
C 129	Ceramic Chip NP0 1n 5% 63V, size 1206	217005
C 130	Ceramic Chip X7R 100n 20% 50V, size 1206	217006
C 132	Ceramic Chip NP0 27p 5% 63V, size 1206	217021
C 133	Ceramic Chip NP0 3p9 ±0p25 63V, size 1206	217017
C 134	Ceramic Chip X7R 100n 20% 50V, size 1206	217006
C 135	C Solid Aluminium 10u 20% 16V Short Type	265108
C 136	Ceramic Chip X7R 100n 20% 50V, size 1206	217006
C 137	Ceramic Chip X7R 100n 20% 50V, size 1206	217006
C 138	Ceramic Chip NP0 18p0 10% 63V, size 1206	217040
C 139	Ceramic Chip X7R 100n 20% 50V, size 1206	217006
C 200	Ceramic Chip NP0 1n 5% 63V, size 1206	217005
C 201	Ceramic Chip NP0 1n 5% 63V, size 1206	217005
C 202	Ceramic Chip NP0 1n 5% 63V, size 1206	217005
C 203	Ceramic Chip NP0 1n 5% 63V, size 1206	217005
C 204	Ceramic Chip NP0 1n 5% 63V, size 1206	217005
C 205	Ceramic Chip NP0 1n 5% 63V, size 1206	217005
C 206	Ceramic Chip NP0 1n 5% 63V, size 1206	217005
C 207	Ceramic Chip NP0 1n 5% 63V, size 1206	217005
C 208	Ceramic Chip X7R 100n 20% 50V, size 1206	217006
C 209	Ceramic Chip X7R 100n 20% 50V, size 1206	217006
C 210	Ceramic Chip NP0 1n 5% 63V, size 1206	217005

C 211	Ceramic Chip NP0 1n 5% 63V, size 1206	217005
C 212	Ceramic Chip NP0 10p 5% 63V, size 1206	217012
C 213	Ceramic Chip NP0 1n 5% 63V, size 1206	217005
C 214	Ceramic Chip NP0 100p 5% 63V, size 1206	217004
C 215	Ceramic Chip NP0 1n 5% 63V, size 1206	217005
C 216	Ceramic Chip NP0 27p 5% 63V, size 1206	217021
C 217	C Solid Aluminium 10u 20% 16V Short Type	265108
C 219	C Solid Aluminium 10u 20% 16V Short Type	265108
C 220	C Solid Aluminium 10u 20% 16V Short Type	265108
C 221	Ceramic Chip X7R 100n 20% 50V, size 1206	217006
C 222	Ceramic Chip X7R 100n 20% 50V, size 1206	217006
C 223	Ceramic Chip X7R 100n 20% 50V, size 1206	217006
C 224	Ceramic Chip NP0 56p 5% 63V, size 1206	217030
C 225	Ceramic Chip NP0 10p 5% 63V, size 1206	217012
C 226	Ceramic Chip NP0 150p 5% 63V, size 1206	217027
C 227	Ceramic Chip NP0 3p9 ±0p25 63V, size 1206	217017
C 228	Ceramic Chip NP0 56p 5% 63V, size 1206	217030
C 229	Ceramic Chip NP0 1n 5% 63V, size 1206	217005
C 230	Ceramic Chip NP0 15p 5% 63V, size 1206	217002
C 231	Ceramic Chip NP0 1n 5% 63V, size 1206	217005
C 232	Ceramic Chip NP0 15p 5% 63V, size 1206	217002
C 233	Ceramic Chip NP0 15p 5% 63V, size 1206	217002
C 234	Ceramic Chip NP0 1n 5% 63V, size 1206	217005
C 235	Ceramic Chip NP0 1n 5% 63V, size 1206	217005
C 236	C Ceramic 100n 20% 50V	213401
C 237	Ceramic Chip X7R 100n 20% 50V, size 1206	217006
C 238	Ceramic Chip NP0 150p 5% 63V, size 1206	217027
C 300	C Solid Aluminium 10u 20% 16V Short Type	265108
C 301	C Ceramic 100n 20% 50V	213401
C 302	C Solid Aluminium 68u 20% 6v3 Short Type	265111
C 303	C Ceramic 100n 20% 50V	213401
C 304	C Ceramic 100n 20% 50V	213401
C 305	C Solid Aluminium 10u 20% 16V Short Type	265108
C 306	Ceramic Chip NP0 1n 5% 63V, size 1206	217005
C 307	C Ceramic 100n 20% 50V	213401
C 308	Ceramic Chip NP0 100p 5% 63V, size 1206	217004
C 309	MKT, 0.22/63/10, R:3.5*8*7.2, RM2	241071
C 310	Ceramic Chip NP0 270p 5% 63V, size 1206	217033
C 311	Ceramic Chip NP0 18p0 10% 63V, size 1206	217040
C 312	Ceramic Chip NP0 470p 5% 63V, size 1206	217024
C 313	Ceramic Chip NP0 39p 5% 63V, size 1206	217035
C 314	Ceramic Chip NP0 390p 5% 63V, size 1206	217037
C 315	MKT, 0.33/63/10, R:2.5*7*4.6, RM1	241126
C 316	C Ceramic 100n 20% 50V	213401
C 317	C Solid Aluminium 10u 20% 16V Short Type	265108
C 318	C Ceramic 100n 20% 50V	213401
C 319	Ceramic Chip X7R 100n 20% 50V, size 1206	217006
C 320	C Ceramic 100n 20% 50V	213401
C 321	C Ceramic 100n 20% 50V	213401
C 322	C Ceramic 100n 20% 50V	213401
C 323	C Ceramic 100n 20% 50V	213401
C 324	C Ceramic 100n 20% 50V	213401
C 325	C Ceramic 100n 20% 50V	213401
C 326	C Ceramic 100n 20% 50V	213401

C 327	C Ceramic 100n 20% 50V	213401
C 328	Ceramic Chip X7R 100n 20% 50V, size 1206	217006
C 329	Ceramic Chip X7R 100n 20% 50V, size 1206	217006
C 400	Ceramic Chip NP0 1n 5% 63V, size 1206	217005
C 401	Ceramic Chip NP0 1n 5% 63V, size 1206	217005
C 402	Ceramic Chip NP0 1n 5% 63V, size 1206	217005
C 403	Ceramic Chip NP0 1n 5% 63V, size 1206	217005
C 404	Ceramic Chip X7R 100n 20% 50V, size 1206	217006
C 405	Ceramic Chip NP0 1n 5% 63V, size 1206	217005
C 406	Ceramic Chip NP0 1n 5% 63V, size 1206	217005
C 407	Ceramic Chip NP0 10p 5% 63V, size 1206	217012
C 408	Ceramic Chip NP0 1n 5% 63V, size 1206	217005
C 409	Ceramic Chip NP0 1n 5% 63V, size 1206	217005
C 410	Ceramic Chip NP0 1n 5% 63V, size 1206	217005
C 411	Ceramic Chip NP0 1n 5% 63V, size 1206	217005
C 412	Ceramic Chip X7R 100n 20% 50V, size 1206	217006
C 413	C Solid Aluminium 10u 20% 16V Short Type	265108
C 414	Ceramic Chip NP0 1n 5% 63V, size 1206	217005
C 415	Ceramic Chip NP0 1n 5% 63V, size 1206	217005
C 417	Ceramic Chip NP0 100p 5% 63V, size 1206	217004
C 418	Ceramic Chip NP0 27p 5% 63V, size 1206	217021
C 419	C Solid Aluminium 10u 20% 16V Short Type	265108
C 420	C Solid Aluminium 10u 20% 16V Short Type	265108
C 421	C Ceramic 100n 20% 50V	213401
C 422	C Ceramic 100n 20% 50V	213401
C 423	C Ceramic 100n 20% 50V	213401
C 424	Ceramic Chip NP0 1n 5% 63V, size 1206	217005
C 425	Ceramic Chip NP0 1n 5% 63V, size 1206	217005
C 426	Ceramic Chip NP0 1n 5% 63V, size 1206	217005
C 427	C Ceramic 100n 20% 50V	213401
C 428	C Ceramic 100n 20% 50V	213401
C 429	Ceramic Chip NP0 10p 5% 63V, size 1206	217012
C 500	Ceramic Chip NP0 1n 5% 63V, size 1206	217005
C 501	C Ceramic 100n 20% 50V	213401
C 502	C Ceramic 100n 20% 50V	213401
C 503	Ceramic Chip NP0 1n 5% 63V, size 1206	217005
C 504	Ceramic Chip NP0 1n 5% 63V, size 1206	217005
C 505	C Ceramic 100n 20% 50V	213401
C 506	Ceramic Chip X7R 100n 20% 50V, size 1206	217006
C 507	Ceramic Chip NP0 1n 5% 63V, size 1206	217005
C 508	C Ceramic 100n 20% 50V	213401
C 509	Ceramic Chip X7R 100n 20% 50V, size 1206	217006
C 510	Ceramic Chip X7R 100n 20% 50V, size 1206	217006
C 511	Ceramic Chip X7R 100n 20% 50V, size 1206	217006
C 515	Ceramic Chip NP0 18p0 10% 63V, size 1206	217040
C 516	C Ceramic 100n 20% 50V	213401
C 517	C Solid Aluminium 10u 20% 16V Short Type	265108
C 518	C Solid Aluminium 10u 20% 16V Short Type	265108
C 519	Ceramic Chip X7R 100n 20% 50V, size 1206	217006
C 520	Ceramic Chip X7R 10n 20% 63V, size 1206	217020
C 521	Ceramic Chip NP0 270p 5% 63V, size 1206	217033
C 522	C Ceramic 100n 20% 50V	213401
C 523	Ceramic Chip X7R 100n 20% 50V, size 1206	217006
C 524	Ceramic Chip X7R 100n 20% 50V, size 1206	217006

C 600	C Ceramic 100n 20% 50V		213401
C 601	C Ceramic 100n 20% 50V		213401
C 602	C Ceramic 100n 20% 50V		213401
C 603	C Ceramic 100n 20% 50V		213401
C 604	C Ceramic 100n 20% 50V		213401
C 605	C Ceramic 100n 20% 50V		213401
C 606	C Ceramic 100n 20% 50V		213401
C 607	C Ceramic 100n 20% 50V		213401
C 608	C Solid Aluminium 10u 20% 16V Short Type		265108
C 609	C Solid Aluminium 10u 20% 16V Short Type		265108
C 610	C Solid Aluminium 33u 20% 10V Short Type		265105
C 611	Electrolytic 100/25, 2000h/85°, R:6.3*11, RM2		261073
C 612	Ceramic Chip X7R 100n 20% 50V, size 1206		217006
C 613	C Ceramic 100n 20% 50V		213401
C 614	C Ceramic 100n 20% 50V		213401
C 615	C Ceramic 100n 20% 50V		213401
C 616	C Ceramic 100n 20% 50V		213401
C 617	C Ceramic 100n 20% 50V		213401
C 618	C Solid Aluminium 10u 20% 16V Short Type		265108
C 619	C Solid Aluminium 10u 20% 16V Short Type		265108
C 620	C Ceramic 100n 20% 50V		213401
C 621	C Ceramic 100n 20% 50V		213401
C 622	C Ceramic 100n 20% 50V		213401
C 623	C electrolytic 10u0 25V	NN	261081
C 624	C Ceramic 100n 20% 50V		213401
C 625	C Ceramic 100n 20% 50V		213401
C 627	C Solid Aluminium 10u 20% 16V Short Type		265108
C 628	C Solid Aluminium 10u 20% 16V Short Type		265108
C 629	C Solid Aluminium 10u 20% 16V Short Type		265108

DIODES

CR 100	Diode general purpose BAS16 SOT23	352006
CR 101	Diode general purpose BAS16 SOT23	352006
CR 102	Diode general purpose BAS16 SOT23	352006
CR 103	Diode general purpose BAS16 SOT23	352006
CR 104	Diode zener BZX84-C4V7 SOT23	352007
CR 105	Diode zener BZX84-C2V7 SOT23	352008
CR 106	Diode general purpose BAS16 SOT23	352006
CR 107	Diode zener BZX84-C2V7 SOT23	352008
CR 108	Diode general purpose BAS16 SOT23	352006
CR 109	Diode general purpose BAS16 SOT23	352006
CR 110	Diode general purpose BAS16 SOT23	352006
CR 111	Diode general purpose BAS16 SOT23	352006
CR 112	Diode general purpose BAS16 SOT23	352006
CR 113	Diode general purpose BAS16 SOT23	352006
CR 114	Diode zener BZX84-C4V7 SOT23	352007
CR 115	Diode general purpose BAS16 SOT23	352006
CR 116	Diode zener BZX84-C3V9 SOT23	352009
CR 201	Diode BAT18 band switching SOT23	352005
CR 202	Diode BAT18 band switching SOT23	352005
CR 203	Diode BAT18 band switching SOT23	352005
CR 204	Diode BBY40 variable capacitance diode 28V 50nA SOT23	352001
CR 205	Diode BBY40 variable capacitance diode 28V 50nA SOT23	352001

CR 206	Diode BBY40 variable capacitance diode 28V 50nA SOT23	352001
CR 207	Diode BBY40 variable capacitance diode 28V 50nA SOT23	352001
CR 208	Diode BAT18 band switching SOT23	352005
CR 209	Diode dual schottky HSMS-2812 SOT23	352003
CR 210	Diode zener BZX84-C2V7 SOT23	352008
CR 211	Diode BAT18 band switching SOT23	352005
CR 300	Diode general purpose BAS16 SOT23	352006
CR 301	Diode general purpose BAS16 SOT23	352006
CR 302	Diode general purpose BAS16 SOT23	352006
CR 303	Diode general purpose BAS16 SOT23	352006
CR 304	Diode general purpose BAS16 SOT23	352006
CR 305	Diode zener BZX84-C4V7 SOT23	352007
CR 306	Diode zener BZX84-C2V7 SOT23	352008
CR 307	Diode zener BZX84-C2V7 SOT23	352008
CR 308	Diode general purpose BAS16 SOT23	352006
CR 309	Diode general purpose BAS16 SOT23	352006
CR 310	Diode dual schottky HSMS-2812 SOT23	352003
CR 311	Diode zener BZX84-C4V7 SOT23	352007
CR 312	Diode general purpose BAS16 SOT23	352006
CR 401	Diode BAT18 band switching SOT23	352005
CR 402	Diode BAT18 band switching SOT23	352005
CR 403	Diode BAT18 band switching SOT23	352005
CR 404	Diode BAT18 band switching SOT23	352005
CR 405	Diode BBY40 variable capacitance diode 28V 50nA SOT23	352001
CR 406	Diode BBY40 variable capacitance diode 28V 50nA SOT23	352001
CR 407	Diode BBY40 variable capacitance diode 28V 50nA SOT23	352001
CR 408	Diode BBY40 variable capacitance diode 28V 50nA SOT23	352001
CR 409	Diode dual schottky HSMS-2812 SOT23	352003
CR 410	Diode zener BZX84-C2V7 SOT23	352008
CR 411	Diode BAT18 band switching SOT23	352005
CR 500	Diode general purpose BAS16 SOT23	352006
CR 501	Diode Zener BZX79-C10V 0.4W	350657
CR 600	Diode general purpose BAS16 SOT23	352006

CONNECTORS

J 100	Con SMB Angle Pcb Mounting 21,15mm	800330
J 200	Con SMB Angle Pcb Mounting 21,15mm	800330
J 600	DIN 41612 64 pol male 90°, C/2 class II	805958

CHOKES

L 100	Choke HF Mini 22u 10% 170mA	703081
L 101	Choke HF Mini 22u 10% 170mA	703081
L 102	Chip Coil 1u 5%	703802
L 103	Chip Coil 1u 5%	703802
L 104	Chip Coil 1u 5%	703802
L 105	Choke Mini 10u 5% 0.23A	703077
L 200	Tuneable Inductor 6.5 Turn	740250
L 201	Tuneable Inductor 3.5 Turn	740238
L 202	Tuneable Inductor 3.5 Turn	740238
L 203	Tuneable Inductor 1.5 Turn	740249
L 204	Chip Coil 1u 5%	703802
L 205	Coil For SYN4 RE122 L205	740247

L 206	Chip Coil 1u 5%	703802
L 207	Chip Coil 1u 5%	703802
L 208	Chip Coil 1u 5%	703802
L 209	Chip Coil 68nH 10%	703815
L 210	Chip Coil 1u 5%	703802
L 211	Chip Coil 150n 10%	703813
L 212	Chip Coil 150n 10%	703813
L 213	Chip Coil 1u 5%	703802
L 214	Chip Coil 15n 10%	703814
L 215	Chip Coil 1u 5%	703802
L 300	Choke HF Mini 22u 10% 170mA	703081
L 301	Choke HF Mini 22u 10% 170mA	703081
L 400	Chip Coil 1u 5%	703802
L 401	Tuneable Inductor 7.5 Turn	740243
L 402	Tuneable Inductor 3.5 Turn	740238
L 403	Tuneable Inductor 4.5 Turn	740237
L 404	Tuneable Inductor 1.5 Turn	740242
L 405	Coil For SYN4 RE122 L405	740248
L 406	Chip Coil 1u 5%	703802
L 407	Chip Coil 1u 5%	703802
L 408	Chip Coil 1u 5%	703802
L 409	Chip Coil 1u 5%	703802
L 410	Chip Coil 1u 5%	703802
L 411	Chip Coil 1u 5%	703802
L 500	Chip Coil 100nH 20%	703801
L 600	RF-choke six-hole core green	731204
L 601	RF-choke six-hole core green	731204
L 602	RF-choke six-hole core green	731204
L 603	RF-choke six-hole core green	731204
L 604	RF-choke six-hole core green	731204

TRANSISTORS

Q 100	Transistor jFet N/channel SST112	361012
Q 101	Transistor jFet N/channel SST112	361012
Q 102	Transistor jFet N/channel SST112	361012
Q 103	Transistor jFet N/channel SST112	361012
Q 104	Transistor BFR93A SMD npn	361002
Q 105	Transistor BFT93 SOT-23 PNP	361004
Q 106	Transistor BFR93A SMD npn	361002
Q 107	Transistor BFR93A SMD npn	361002
Q 108	Transistor BFT93 SOT-23 PNP	361004
Q 109	Transistor BFR93A SMD npn	361002
Q 110	Transistor BF550 Sot23 PNP	361011
Q 111	Transistor BF840 Sot23 NPN	361008
Q 200	Transistor 2xSST309 2-Parrede Fets	361018
Q 201	Transistor 2xSST309 2-Parrede Fets	361018
Q 202	Transistor BC849C Sot23	361009
Q 203	Transistor BC849C Sot23	361009
Q 204	Transistor BC857B PNP SOT23	361010
Q 205	Transistor BC849C Sot23	361009
Q 206	Transistor BC857B PNP SOT23	361010
Q 207	Transistor BF840 Sot23 NPN	361008
Q 208	Transistor BC857B PNP SOT23	361010

Q 300	Transistor BFT93 SOT-23 PNP	361004
Q 301	Transistor BFT93 SOT-23 PNP	361004
Q 302	Transistor BFR93A SMD npn	361002
Q 303	Transistor BFR93A SMD npn	361002
Q 304	Transistor BFR93A SMD npn	361002
Q 305	Transistor BFR93A SMD npn	361002
Q 306	Transistor BFR93A SMD npn	361002
Q 307	Transistor BFR93A SMD npn	361002
Q 400	Transistor 2xSST309 2-Parrede Fets	361018
Q 401	Transistor 2xSST309 2-Parrede Fets	361018
Q 402	Transistor BC857B PNP SOT23	361010
Q 403	Transistor BC849C Sot23	361009
Q 404	Transistor BC849C Sot23	361009
Q 405	Transistor BC849C Sot23	361009
Q 406	Transistor BC857B PNP SOT23	361010
Q 500	Transistor BC857B PNP SOT23	361010
Q 600	Transistor BC849C Sot23	361009

INTEGRATED ANALOG CIRCUITS

QA 100	IC LF353M Wide Bandwidth Dual Jfet Input SO-8	366007
QA 102	IC TL431 ADJ. Precision Shunt Regulators	364849
QA 200	IC MAR-4 Monolithic RF Amplifier	364823
QA 201	IC MAR-4 Monolithic RF Amplifier	364823
QA 300	IC LF353M Wide Bandwidth Dual Jfet Input SO-8	366007
QA 302	IC TL431 ADJ. Precision Shunt Regulators	364849
QA 400	IC MAR-4 Monolithic RF Amplifier	364823
QA 401	IC MAR-4 Monolithic RF Amplifier	364823
QA 500	IC LF353M Wide Bandwidth Dual Jfet Input SO-8	366007
QA 501	IC LF353M Wide Bandwidth Dual Jfet Input SO-8	366007
QA 502	IC MAR-4 Monolithic RF Amplifier	364823
QA 503	IC 7524 8-Bit Dac so-16	366008
QA 600	IC L7905CT - 5V regulator	364884
QA 601	IC L4805 Low Drop Out Voltage Reg.	365016
QA 602	IC LM324 Low Power OP-Amp SO-14	366010
QA 603	IC LM317LM Adj.Voltage reg	366023

INTEGRATED DIGITAL CIRCUITS

QD 100	IC MC12040 Phase-Frequency Detecter	364842
QD 102	IC 10116 tripl line rec.	364331
QD 103	IC 10H116 Triple Line Receiver	364729
QD 300	IC MC12040 Phase-Frequency Detecter	364842
QD 301	IC 10H109 Dual 4-5 Input OR/NOR Gate	365010
QD 302	IC 10116 tripl line rec.	364331
QD 303	IC 10231 dual D ff	364485
QD 304	IC 10H136 Universal Hex Counter	365009
QD 305	IC 10H131 dual D ff	364933
QD 306	IC 10H136 Universal Hex Counter	365009
QD 307	IC 74HC163 4-Bit Counter SMD	366013
QD 308	IC 10124 quad TTL-ECL buf	364481
QD 309	IC 10124 quad TTL-ECL buf	364481
QD 400	IC 10H116 Triple Line Receiver	364729
QD 500	IC 74F269D 8-Bit Counter Sol-2	366006

QD 501	IC 74F574 Octal D-FF Sol-20	366004
QD 502	IC 74F109 Dual JK FF Sol-16	366002
QD 503	IC 74F74 D-FF So-14	366003
QD 504	Piggy Back for Pre-scaler	902323
QD 505	IC 10125 quad TTL-ECL buf	364482
QD 600	IC 74HC14 Hex Inv Schmitt Trigger SO-14	366009
QD 601	RExxx Seriel Bus Receiver For 6 Adr. 364-876	369331
QD 602	IC 4094 8-Stage Shift-And-Store Bus Reg SO-16	366011
QD 603	IC 4094 8-Stage Shift-And-Store Bus Reg SO-16	366011
QD 604	IC 4094 8-Stage Shift-And-Store Bus Reg SO-16	366011

RESISTORS

R 100	Metal Film Chip 5K62 1% 0.2W TC50	147086
R 101	Metal Film Chip 5K62 1% 0.2W TC50	147086
R 102	Metal Film Chip 21E5 1% 0.2W TC50	147052
R 103	Metal Film Chip 10K0 1% 0.2W TC50	147039
R 104	Metal Film Chip 10K0 1% 0.2W TC50	147039
R 105	Metal Film Chip 10K0 1% 0.2W TC50	147039
R 106	Metal Film Chip 10K0 1% 0.2W TC50	147039
R 107	Metal Film Chip 21E5 1% 0.2W TC50	147052
R 108	Metal Film Chip 1K21 1% 0.2W TC50	147061
R 109	Metal Film Chip 21E5 1% 0.2W TC50	147052
R 110	Metal Film Chip 100E 1% 0.250W TC50	147014
R 111	Metal Film Chip 46E4 1% 0.2W TC50	147016
R 112	Metal Film Chip 261E 1% 0.2W TC50	147045
R 113	Metal Film Chip 10K0 1% 0.2W TC50	147039
R 114	Metal Film Chip 3K16 1% 0.2W TC50	147055
R 115	Metal Film Chip 215E 1% 0.2W TC50	147109
R 116	Metal Film Chip 1K47 1% 0.2W TC50	147080
R 117	Metal Film Chip 825E 1% 0.2W TC50	147077
R 118	Metal Film Chip 3K16 1% 0.2W TC50	147055
R 119	Metal Film Chip 866E 1% 0.125W TC50	147010
R 120	Metal Film Chip 1K00 1% 0.2W TC50	147040
R 121	Metal Film Chip 464E 1% 0.2W TC50	147035
R 122	Metal Film Chip 12E1 1% 0.2W TC50	147023
R 123	Metal Film Chip 178E 1% 0.2W TC50	147046
R 124	Metal Film Chip 12E1 1% 0.2W TC50	147023
R 125	Metal Film Chip 464E 1% 0.2W TC50	147035
R 126	Metal Film Chip 464E 1% 0.2W TC50	147035
R 127	Metal Film Chip 12E1 1% 0.2W TC50	147023
R 128	Metal Film Chip 178E 1% 0.2W TC50	147046
R 129	Metal Film Chip 12E1 1% 0.2W TC50	147023
R 130	Metal Film Chip 464E 1% 0.2W TC50	147035
R 131	Metal Film Chip 21E5 1% 0.2W TC50	147052
R 132	Metal Film Chip 2K15 1% 0.2W TC50	147051
R 133	Metal Film Chip 2K15 1% 0.2W TC50	147051
R 134	Metal Film Chip 1K78 1% 0.2W TC50	147037
R 135	Metal Film Chip 1K00 1% 0.2W TC50	147040
R 136	Metal Film Chip 2K15 1% 0.2W TC50	147051
R 139	Metal Film Chip 56K2 1% 0.2W TC50	147079
R 140	Metal Film Chip 6K81 1% 0.2W TC50	147090
R 141	Metal Film Chip 464E 1% 0.2W TC50	147035
R 142	Metal Film Chip 464E 1% 0.2W TC50	147035

R 143	Metal Film Chip 464E 1% 0.2W TC50	147035
R 144	Metal Film Chip 464E 1% 0.2W TC50	147035
R 145	Metal Film Chip 1K00 1% 0.2W TC50	147040
R 146	Metal Film Chip 464E 1% 0.2W TC50	147035
R 147	Metal Film Chip 1K47 1% 0.2W TC50	147080
R 148	Metal Film Chip 261E 1% 0.2W TC50	147045
R 149	Metal Film Chip 2K61 1% 0.2W TC50	147038
R 150	Metal Film Chip 21E5 1% 0.2W TC50	147052
R 151	Metal Film Chip 464E 1% 0.2W TC50	147035
R 152	Metal Film Chip 464E 1% 0.2W TC50	147035
R 153	Metal Film Chip 464E 1% 0.2W TC50	147035
R 154	Metal Film Chip 1K00 1% 0.2W TC50	147040
R 155	Metal Film Chip 1K00 1% 0.2W TC50	147040
R 156	Metal Film Chip 46E4 1% 0.2W TC50	147016
R 157	Metal Film Chip 1K00 1% 0.2W TC50	147040
R 158	Metal Film Chip 121E 1% 0.2W TC50	147022
R 159	Metal Film Chip 1K00 1% 0.2W TC50	147040
R 160	Metal Film Chip 56E2 1% 0.2W TC50	147030
R 161	Metal Film Chip 133E 1% 0.2W TC50	147032
R 162	Metal Film Chip 82E5 1% 0.2W TC50	147049
R 163	Metal Film Chip 1K00 1% 0.2W TC50	147040
R 164	Metal Film Chip 3K16 1% 0.2W TC50	147055
R 165	Metal Film Chip 464E 1% 0.2W TC50	147035
R 166	Metal Film Chip 464E 1% 0.2W TC50	147035
R 167	Metal Film Chip 464E 1% 0.2W TC50	147035
R 168	Metal Film Chip 56K2 1% 0.2W TC50	147079
R 200	Metal Film Chip 464E 1% 0.2W TC50	147035
R 201	Metal Film Chip 2K15 1% 0.2W TC50	147051
R 202	Metal Film Chip 464E 1% 0.2W TC50	147035
R 203	Metal Film Chip 2K15 1% 0.2W TC50	147051
R 204	Metal Film Chip 464E 1% 0.2W TC50	147035
R 205	Metal Film Chip 2K15 1% 0.2W TC50	147051
R 206	Metal Film Chip 464E 1% 0.2W TC50	147035
R 207	Metal Film Chip 562E 1% 0.2W TC50	147036
R 208	Metal Film Chip 383E 1% 0.2W TC50	147058
R 209	Metal Film Chip 383E 1% 0.2W TC50	147058
R 210	Metal Film Chip 82K5 1% 0.2W TC50	147087
R 211	Metal Film Chip 215E 1% 0.2W TC50	147109
R 212	Metal Film Chip 215E 1% 0.2W TC50	147109
R 213	Metal Film Chip 82K5 1% 0.2W TC50	147087
R 214	Metal Film Chip 5K62 1% 0.2W TC50	147086
R 215	Metal Film Chip 3K83 1% 0.2W TC50	147064
R 216	Metal Film Chip 100E 1% 0.250W TC50	147014
R 217	Metal Film Chip 100E 1% 0.250W TC50	147014
R 218	Metal Film Chip 31K6 1% 0.2W TC50	147085
R 219	Metal Film Chip 31E6 1% 0.2W TC50	147075
R 220	Metal Film Chip 1K78 1% 0.2W TC50	147037
R 221	Metal Film Chip 100K 1% 0.2W TC50	147062
R 222	Metal Film Chip 3K83 1% 0.2W TC50	147064
R 223	Metal Film Chip 100K 1% 0.2W TC50	147062
R 224	Cermet Trimpot 47K 20% 0.5W TC70	182314
R 225	Metal Film Chip 10K0 1% 0.2W TC50	147039
R 226	Metal Film Chip 100K 1% 0.2W TC50	147062
R 227	Metal Film Chip 31E6 1% 0.2W TC50	147075

R 228	Metal Film Chip 4K64 1% 0.2W TC50	147043
R 229	Metal Film Chip 2K61 1% 0.2W TC50	147038
R 230	Metal Film Chip 100E 1% 0.250W TC50	147014
R 231	Metal Film Chip 56E2 1% 0.2W TC50	147030
R 232	Metal Film Chip 100E 1% 0.250W TC50	147014
R 233	Metal Film Chip 215E 1% 0.2W TC50	147109
R 234	Metal Film Chip 383E 1% 0.2W TC50	147058
R 235	Metal Film Chip 383E 1% 0.2W TC50	147058
R 236	Metal Film Chip 2K15 1% 0.2W TC50	147051
R 300	Metal Film Chip 21E5 1% 0.2W TC50	147052
R 301	Metal Film Chip 1K21 1% 0.2W TC50	147061
R 302	Metal Film Chip 21E5 1% 0.2W TC50	147052
R 303	Metal Film Chip 5K62 1% 0.2W TC50	147086
R 304	Metal Film Chip 5K62 1% 0.2W TC50	147086
R 305	Metal Film Chip 21E5 1% 0.2W TC50	147052
R 306	Metal Film Chip 316E 1% 0.2W TC50	147072
R 307	Metal Film Chip 464E 1% 0.2W TC50	147035
R 308	Metal Film Chip 12E1 1% 0.2W TC50	147023
R 309	Metal Film Chip 178E 1% 0.2W TC50	147046
R 310	Metal Film Chip 12E1 1% 0.2W TC50	147023
R 311	Metal Film Chip 464E 1% 0.2W TC50	147035
R 312	Metal Film Chip 464E 1% 0.2W TC50	147035
R 313	Metal Film Chip 12E1 1% 0.2W TC50	147023
R 314	Metal Film Chip 178E 1% 0.2W TC50	147046
R 315	Metal Film Chip 12E1 1% 0.2W TC50	147023
R 316	Metal Film Chip 464E 1% 0.2W TC50	147035
R 317	Metal Film Chip 100E 1% 0.250W TC50	147014
R 318	Metal Film Chip 21E5 1% 0.2W TC50	147052
R 319	Metal Film Chip 383E 1% 0.2W TC50	147058
R 320	Metal Film Chip 261E 1% 0.2W TC50	147045
R 321	Metal Film Chip 2K15 1% 0.2W TC50	147051
R 322	Metal Film Chip 2K15 1% 0.2W TC50	147051
R 323	Metal Film Chip 1K78 1% 0.2W TC50	147037
R 324	Metal Film Chip 1K00 1% 0.2W TC50	147040
R 325	Metal Film Chip 2K15 1% 0.2W TC50	147051
R 326	Metal Film Chip 3K16 1% 0.2W TC50	147055
R 327	Metal Film Chip 215E 1% 0.2W TC50	147109
R 329	Metal Film Chip 825E 1% 0.2W TC50	147077
R 330	Metal Film Chip 56K2 1% 0.2W TC50	147079
R 331	Metal Film Chip 464E 1% 0.2W TC50	147035
R 332	Metal Film Chip 464E 1% 0.2W TC50	147035
R 333	Metal Film Chip 464E 1% 0.2W TC50	147035
R 334	Metal Film Chip 464E 1% 0.2W TC50	147035
R 335	Metal Film Chip 464E 1% 0.2W TC50	147035
R 336	Metal Film Chip 464E 1% 0.2W TC50	147035
R 337	Metal Film Chip 464E 1% 0.2W TC50	147035
R 338	Metal Film Chip 464E 1% 0.2W TC50	147035
R 340	Metal Film Chip 6K81 1% 0.2W TC50	147090
R 341	Metal Film Chip 464E 1% 0.2W TC50	147035
R 342	Metal Film Chip 464E 1% 0.2W TC50	147035
R 343	Metal Film Chip 464E 1% 0.2W TC50	147035
R 344	Metal Film Chip 825E 1% 0.2W TC50	147077
R 345	Metal Film Chip 2K15 1% 0.2W TC50	147051
R 346	Metal Film Chip 383E 1% 0.2W TC50	147058

R 347	Metal Film Chip 215E 1% 0.2W TC50	147109
R 348	Metal Film Chip 464E 1% 0.2W TC50	147035
R 349	Metal Film Chip 2K15 1% 0.2W TC50	147051
R 351	Metal Film Chip 1K00 1% 0.2W TC50	147040
R 352	Metal Film Chip 2K15 1% 0.2W TC50	147051
R 353	Metal Film Chip 2K15 1% 0.2W TC50	147051
R 354	Metal Film Chip 2K15 1% 0.2W TC50	147051
R 355	Metal Film Chip 2K15 1% 0.2W TC50	147051
R 356	Metal Film Chip 2K15 1% 0.2W TC50	147051
R 357	Metal Film Chip 3K16 1% 0.2W TC50	147055
R 358	Metal Film Chip 464E 1% 0.2W TC50	147035
R 359	Metal Film Chip 464E 1% 0.2W TC50	147035
R 400	Metal Film Chip 464E 1% 0.2W TC50	147035
R 401	Metal Film Chip 2K15 1% 0.2W TC50	147051
R 402	Metal Film Chip 464E 1% 0.2W TC50	147035
R 403	Metal Film Chip 2K15 1% 0.2W TC50	147051
R 404	Metal Film Chip 464E 1% 0.2W TC50	147035
R 405	Metal Film Chip 2K15 1% 0.2W TC50	147051
R 406	Metal Film Chip 464E 1% 0.2W TC50	147035
R 407	Metal Film Chip 562E 1% 0.2W TC50	147036
R 408	Metal Film Chip 383E 1% 0.2W TC50	147058
R 409	Metal Film Chip 383E 1% 0.2W TC50	147058
R 410	Metal Film Chip 5K62 1% 0.2W TC50	147086
R 411	Metal Film Chip 82K5 1% 0.2W TC50	147087
R 412	Metal Film Chip 3K83 1% 0.2W TC50	147064
R 413	Metal Film Chip 215E 1% 0.2W TC50	147109
R 414	Metal Film Chip 215E 1% 0.2W TC50	147109
R 415	Metal Film Chip 82K5 1% 0.2W TC50	147087
R 416	Metal Film Chip 31E6 1% 0.2W TC50	147075
R 417	Metal Film Chip 1K00 1% 0.2W TC50	147040
R 418	Metal Film Chip 10K0 1% 0.2W TC50	147039
R 419	Metal Film Chip 100K 1% 0.2W TC50	147062
R 420	Metal Film Chip 46E4 1% 0.2W TC50	147016
R 421	Metal Film Chip 31E6 1% 0.2W TC50	147075
R 422	Metal Film Chip 100E 1% 0.250W TC50	147014
R 423	Metal Film Chip 100E 1% 0.250W TC50	147014
R 424	Metal Film Chip 31K6 1% 0.2W TC50	147085
R 425	Metal Film Chip 4K64 1% 0.2W TC50	147043
R 426	Metal Film Chip 1K78 1% 0.2W TC50	147037
R 427	Metal Film Chip 100K 1% 0.2W TC50	147062
R 428	Metal Film Chip 100K 1% 0.2W TC50	147062
R 429	Cermet Trimpot 47K 20% 0.5W TC70	182314
R 430	Metal Film Chip 464E 1% 0.2W TC50	147035
R 431	Metal Film Chip 464E 1% 0.2W TC50	147035
R 432	Metal Film Chip 464E 1% 0.2W TC50	147035
R 433	Metal Film Chip 464E 1% 0.2W TC50	147035
R 434	Metal Film Chip 1K00 1% 0.2W TC50	147040
R 435	Metal Film Chip 383E 1% 0.2W TC50	147058
R 436	Metal Film Chip 56E2 1% 0.2W TC50	147030
R 437	Metal Film Chip 383E 1% 0.2W TC50	147058
R 500	Metal Film Chip 100E 1% 0.250W TC50	147014
R 502	Metal Film Chip 46E4 1% 0.2W TC50	147016
R 503	Metal Film Chip 46E4 1% 0.2W TC50	147016
R 504	Metal Film Chip 1K21 1% 0.2W TC50	147061

R 505	Metal Film Chip 82E5 1% 0.2W TC50	147049
R 507	Metal Film Chip 383E 1% 0.2W TC50	147058
R 508	Metal Film Chip 383E 1% 0.2W TC50	147058
R 509	Metal Film Chip 46K4 1% 0.2W TC50	147042
R 510	Metal Film Chip 2K15 1% 0.2W TC50	147051
R 512	Metal Film Chip 3K83 1% 0.2W TC50	147064
R 513	Cermet Trimpot 1K 10% 0.5W TC70	182310
R 514	Metal Film Chip 46E4 1% 0.2W TC50	147016
R 515	Metal Film Chip 464E 1% 0.2W TC50	147035
R 516	Metal Film Chip 316E 1% 0.2W TC50	147072
R 518	Metal Film Chip 4K64 1% 0.2W TC50	147043
R 519	Metal Film Chip 147E 1% 0.2W TC50	147033
R 520	Metal Film Chip 464E 1% 0.2W TC50	147035
R 521	Metal Film Chip 464E 1% 0.2W TC50	147035
R 600	Metal Film Chip 21K5 1% 0.2W TC50	147066
R 601	Metal Film Chip 21K5 1% 0.2W TC50	147066
R 603	Metal Film Chip 4K64 1% 0.2W TC50	147043
R 604	Metal Film Chip 4K64 1% 0.2W TC50	147043
R 605	Metal Film Chip 3K83 1% 0.2W TC50	147064
R 606	Metal Film Chip 215E 1% 0.2W TC50	147109
R 607	Metal Film Chip 10K0 1% 0.2W TC50	147039
R 608	Metal Film Chip 100E 1% 0.250W TC50	147014

TESTPOINTS

TP 100	Pin header 3 pol straight l:6.7mm with lock	805894
TP 102	Pin header 3 pol straight l:6.7mm with lock	805894
TP 300	Pin header 3 pol straight l:6.7mm with lock	805894
TP 400	Pin header 3 pol straight l:6.7mm with lock	805894
TP 500	Pin header 3 pol straight l:6.7mm with lock	805894
TP 501	Pin header 3 pol straight l:6.7mm with lock	805894

MIXERS

U 200	Double Balanced Mixer 1-500MHZ SBL-1	910120

CABLES

W 600	Coax Cable For PCB Mounting 140mm	617958

MISCELLANEOUS

Screw Pozidrive panhead M2.5x8	008208
Screw Pozidrive Panhead M3X10	008310
Screw Pozidrive Countersunk M2,5x20	009220
Nut hexagon M3	031302
Washer ø5/9x2,5	042525
Lock washer D3,2/5,5x0,45	046405
Tubular Rivet 2.5X10	060310
Tubular Rivet Ø2,5x0,25x3	060408
Bushing ø8/2,8x13	066155
Mounting Acc. for TO-220	816163
Rectangular Washer F. TO220	816178
Insulation Bushing F. TO-220	816214

	Socket DIL 24 pol, h:4.95 300mil	816274
	L-piece for PCB	857041
	Spring For RE122 Synthesizer 4	878081
	Shield Box 8 Top	881024
	Shield Box 8 Botton	881025
	Shield Box 9 Top	881026
	Shield Box 9 Botton	881027
	Shield Box 10 Top	881028
	Shield Box 10 Botton	881029
	Cover	881037
	Cover	881038
	Shielded Angle	881040
	Cover Plate Middle for RE122	933089
	PCB For RE122 Synthesizer 4	971401
GND1	Solder Terminal 0.1 O2	823303
GND2	Solder Terminal 0.1 O2	823303

Piggy-back for prescaler (902323)

CAPACITORS

C 1	Ceramic Chip X7R 100n 20% 50V, size 1206	217006
C 2	Ceramic Chip NP0 1n 5% 63V, size 1206	217005

CONNECTORS

J 1	Socket adaptor DIL/SMD 14 pol	816347

INTEGRATED DIGITAL CIRCUITS

QD 1	IC 100131/100331 Triple D-F.F	366057
QD 2	IC F100314 Quint Diff.Line Recever	366041

RESISTORS

R 1	Metal Film Chip 464E 1% 0.2W TC50	147035
R 2	Metal Film Chip 464E 1% 0.2W TC50	147035
R 3	Metal Film Chip 464E 1% 0.2W TC50	147035
R 4	Metal Film Chip 464E 1% 0.2W TC50	147035
R 5	Metal Film Chip 1K00 1% 0.2W TC50	147040

MISCELLANEOUS

	RE125 piggy back for pre-scaler	971752

11. REFERENCE/MODULATION BOARD

11.1 Circuit Description

Fig. 11.1 shows the block diagram of the Reference Oscillator and Fig. 11.2 the block diagram of the modulation control circuit.

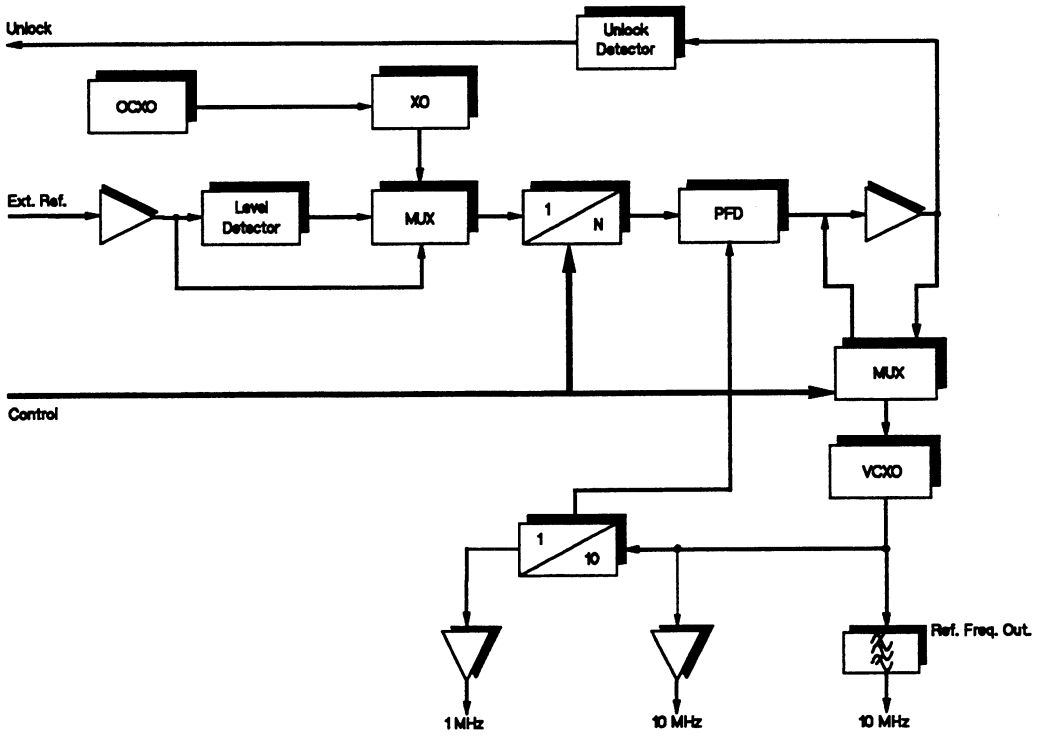

Fig. 11.1 - Block Diagram of Reference Oscillator

This circuit board generates the 1 MHz and the 10 MHz signals used as reference by the frequency synthesis chain. Furthermore, the board includes circuits to perform routing and leveling of the various modulation signals existing in the RE 125.

11.1.1 10 MHz VCXO

The main part of the circuit generating frequency is the 10 MHz VCXO together with the surrounding phase-locked loop. The VCXO has a tuning range of ±450 ppm in order to accept differing loop input frequencies.

The VCXO output is buffered and sent to the motherboard 10 MHz reference line, the PLL loop counter and the rear panel reference frequency output. The rear panel signal is filtered to make it sine shaped.

The loop counter output is a 1 MHz signal, which is routed to the phase detector and to the motherboard 1 MHz reference line.

The PLL loop bandwidth is kept quite low in order to filter external noise from the VCXO control voltage.

11.1.2 10 MHz Reference Oscillator

The 1 MHz input to the PLL circuit comes from a computer-controlled reference counter. This counter is automatically loaded by the main CPU which searches for the correct count ratio when an unlock signal is received from the PLL lock detector.

The reference counter input is either the internal crystal oscillator, XO, or the external reference signal connected to the rear panel. The switching between internal and external reference is automatic, with the external signal having highest priority. The external reference frequency input can be 1, 2, 5 or 10 MHz.

The internal 10 MHz XO can be injection locked to the optional 10 MHz oven-controlled oscillator, OCXO.

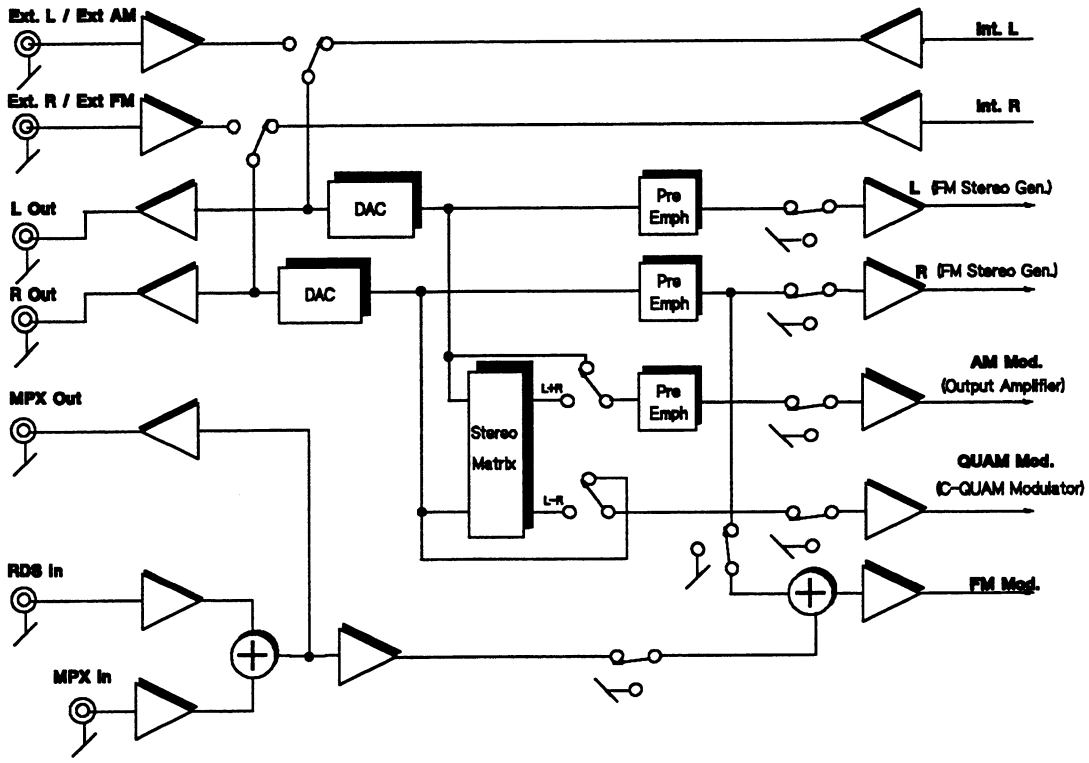

Fig. 11.2 - Block Diagram of Modulation Control Circuit

11.1.3 AF Signal Attenuation

This circuit performs switching between the rear panel terminals, Ext. L/AM and Ext. R/FM, and the internal signals Int. L and Int. R, from the optional Audio Generator.

The two modulation signals are level-controlled by multiplying D/A converters and routed to the AM Stereo Matrix and to the FM Pre-emphasis circuit.

Furthermore, the modulation signals in use with a fixed level of 1 Vp, are routed to the rear panel connectors L Out and R Out.

11.1.4 AM Stereo Matrix

The Stereo Matrix is formed by two dual op-amps and two 1x8 thinfilm precision resistor networks. The matrix output are the signals L, L+R, R and L-R.

L and L+R can be routed to the AM and QUAM modulators, and the R and L-R can be routed to the QUAM modulator.

The AM signal can be pre-emphasized according to the NRSC standard (75 μs).

11.1.5 FM Pre-emphasis

The modulation signals R and L are via the pre-emphasis section routed to the internal optional FM Stereo Generator. In addition, the pre-emphasized 'R' signal can be used for mono FM. The pre-emphasis time constant may be set to Off, 25, 50 and 75 μs.

Also included in the schematic diagram is a summation circuit which enables the use of an external RDS/VRF generator.

11.1.6 Power and Interface

In the schematic diagram the main CPU interface, the power input filtering and the voltage regulation are shown. Furthermore, a temperature sensor is included. This sensor shuts down the main power supply if the temperature rises above 75 °C.

11.2 Adjustments

In each section of the board there are some adjustments to be made. The following items are described:

1. Reference oscillator frequency adjustment.
2. Voltage-controlled crystal oscillator adjustment.
3. AF attenuator adjustment.
4. AM modulation signals adjustments.
5. FM modulation signals adjustments.
6. Temperature guard adjustment.

The adjustments require the use of an extender board (901-885), a frequency counter (1 ppm acc.), an RF generator (10.1 and 0.9 MHz), an AF generator and a precise multimeter (Fluke 45). All adjustments except reference oscillator frequency are made on the extender board with rear panel connections intact.

11.2.1 Reference Oscillator Frequency

Let the RE 125 warm-up for at least one hour. Remove the top plate. Connect a frequency counter to the Ref. Out terminal on the rear panel.

Adjust R314 until the frequency is 10 MHz ±10 Hz. The potentiometer can be accessed through a hole in the top of the RE 125. See section 4.3, **Special Adjustment Points.**

11.2.2 Voltage-controlled Crystal Oscillator

Remove the rear panel and place the board on the extender board. Reconnect the rear panel to the board.

Connect a 0.9 MHz, 0 dBm signal to the Ext. Ref. input. When the voltage at TP200 has ramped to -13 V, tune L202 until the frequency of Ref. Out. (or W200) is 9.9955 MHz.

Alter the input frequency to 10.1 MHz. When the voltage at TP200 has ramped to +13 V, tune L200 until the frequency is 10.0045 MHz.

Repeat the tuning until the frequency band is approximately symmetrical around 10 MHz.

11.2.3 AF Attenuator

With the board on the extender borad and the rear panel connections intact, connect the AF generator set to 1 kHz , 707.07 mVrms to the Ext. L/Ext. AM and Ext. R/Ext. FM BNC connectors.

Set the RE 125 to the following:

If no FM Stereo Generator Option is installed set Ignore missing option to yes.

External FM STEREO (ES), pre-emphasis off, reference deviation 250 kHz and Modulation level 100 %.

Adjust R420 until the 1 kHz level in TP401 is 2.762 Vrms ±0.5 mV.

Adjust R443 until the 1 kHz level in TP402 is 2.762 Vrms ±0.5 mV.

11.2.4 AM Modulation Signals

With the board on the extender board and the rear panel connections intact, connect the AF generator set to 1 kHz , 707.07 mVrms to the Ext. L/Ext. AM and Ext. R/Ext. FM BNC connectors.

Set the RE 125 to the following:

If no AM stereo, Motorola C-QUAM Modulator option is installed set Ignore Missing Options to yes.

External AM STEREO, Stereo mode EM (Extern Matrix), pre-emphasis off, reference AM depth 100 % and Modulation level 80 %.

Adjust R515 until the 1 kHz level at J901-15c is 1.131 Vrms ±0.5 mV.

Adjust R526 until the 1 kHz level at J901-13c is 1.131 Vrms ±0.5 mV.

11.2.5 FM Modulation Signals

With the board on the extender board and the rear panel connections intact, connect the AF generator set to 1 kHz , 707.07 mVrms to the Ext. L/Ext. AM and Ext. R/Ext. FM BNC connectors.

Set the RE 125 to the following:

If no FM Stereo Generator Option is installed set Ignore missing option to yes.

External FM STEREO (ES), pre-emphasis off, reference deviation 250 kHz and Modulation level 100 %.

Adjust R646 until the 1 kHz level at J901-4c is 3.536 Vrms ±0.5 mV.

Adjust R658 until the 1 kHz level at J901-3c is 3.536 Vrms ±0.5 mV.

Set the RE 125 to External FM MONO (EM), pre-emphasis off, reference deviation 250 kHz and Modulation level 100 %.

Adjust R635 until the 1 kHz level at J901-4a is 1.768 Vrms ±0.5 mV.

Connect the AF Generator (1 kHz, 707.07 Vrms) to the RDS/MPX BNC input connector at the rear panel.

Set the RE 125 to External FM Stereo (ES), pre-emphasis off, reference deviation 250 kHz and Modulation level 0.0 %.

If no FM Stereo Generator Option is installed set Ignore missing option to yes.

Adjust R621 until the 1 kHz level at J901-4a is 1.414 Vrms ±0.5 mV.

11.2.6 Temperature Guard

To adjust the trip point of the temperature sensor, the Reference/Modulation board is placed on extender. Open SP901 and close SP902 with a soldering iron.

Connect a DC voltmeter with 10 MΩ input impedance between test point TP901 pin 1 (+) and TP901 pin 2. Adjust the voltage to a reading of 348 mV with R908. This gives a shut-down temperature of 348 K or 75 °C.

Close SP901 and open SP902.

11.3 Schematic Diagrams

The schematic diagram for the Reference/Modulation board is located in the following. The diagram number is 985-423.

11.4 Component Locations

The component locations on the Reference/Modulation board are shown in the following.

11.5 Parts List

A copy of the parts list from production documentation is located in the following. The code number of the assembled PCB is 902-056.

This page is intentionally left blank.

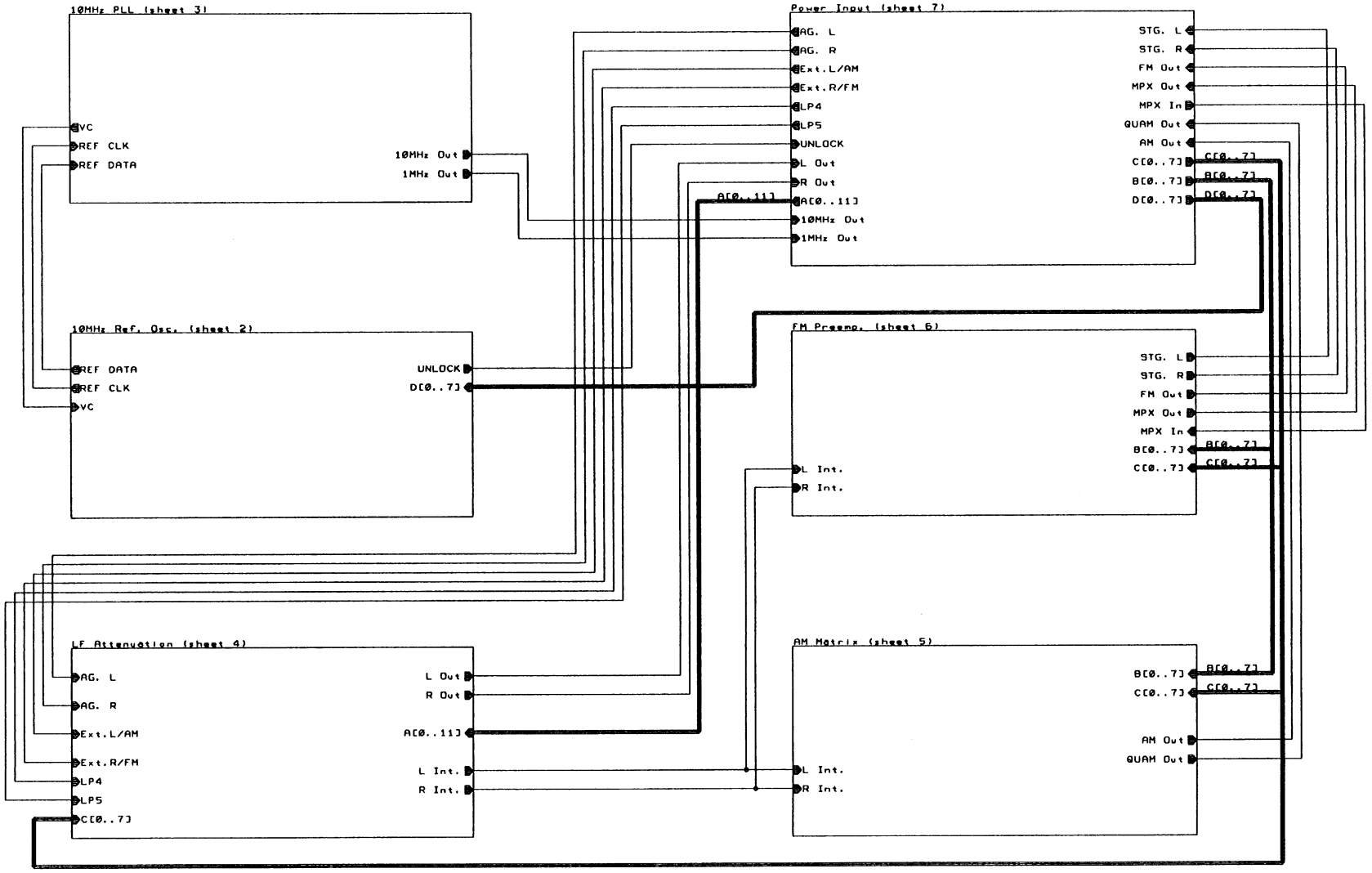

RE TECHNOLOGY AS

RE125

Title: Reference/Modulation Board

Size	Document Number	REV
A	902-056 971-49014 985-423	4a

Date: September 10, 1992 Sheet 1 of 7

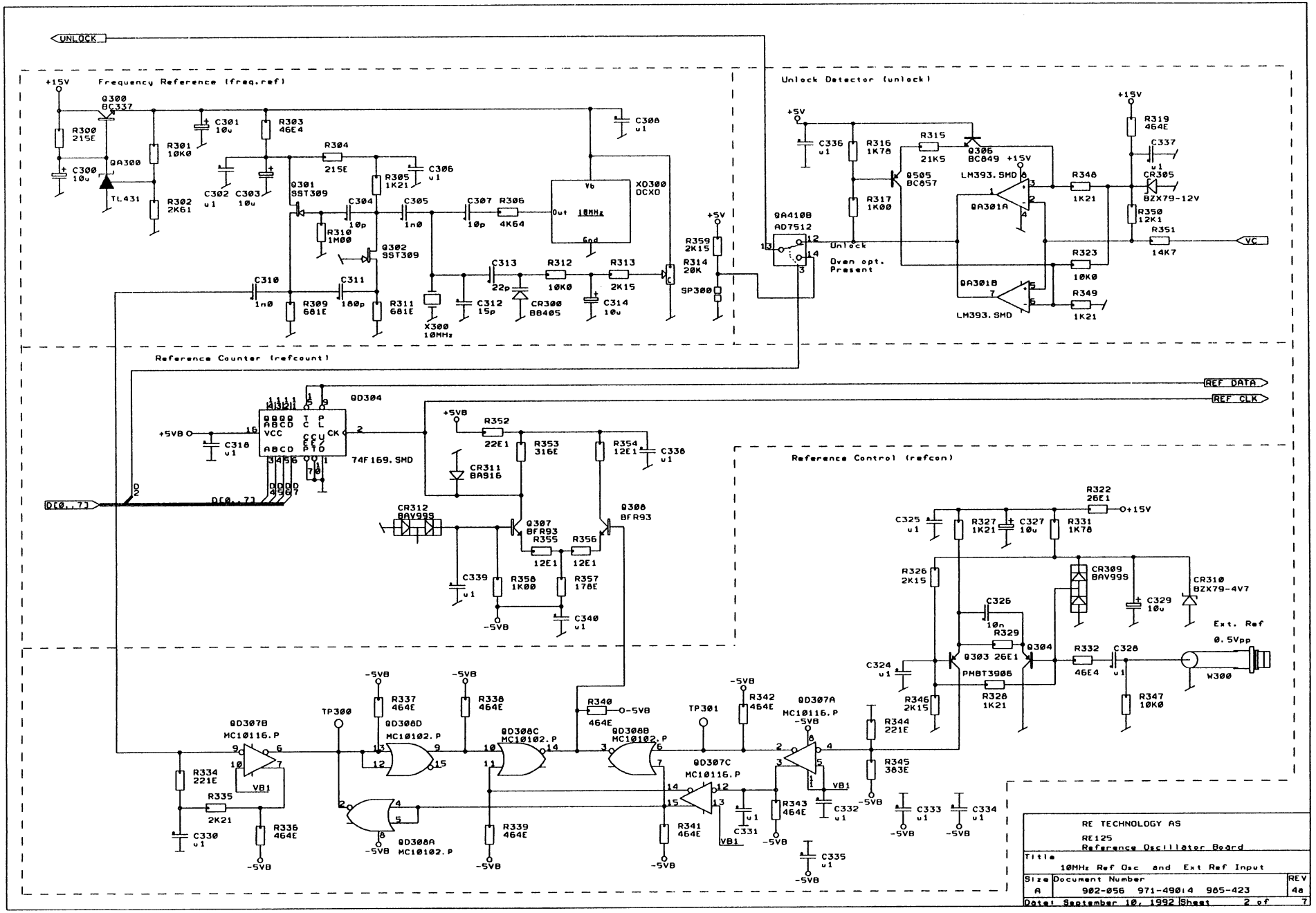
UNLOCK
Frequency Reference (freq.ref)
Unlock Detector (unlock)
Reference Counter (refcount)
Reference Control (refcon)
REF DATA
REF CLK
DC[0..7]
VC
Ext. Ref
0.5Vpp
W300
Unlock
Oven opt.
Present
74F169.SMD
MC10116.P
MC10102.P
LM393.SMD
AD7512
OCXO
10MHz
RE TECHNOLOGY AS
RE125
Reference Oscillator Board
Title
10MHz Ref Osc and Ext Ref Input
Size
A
Document Number
902-056 971-49014 965-423
REV
4a
Date: September 10, 1992
Sheet 2 of 7

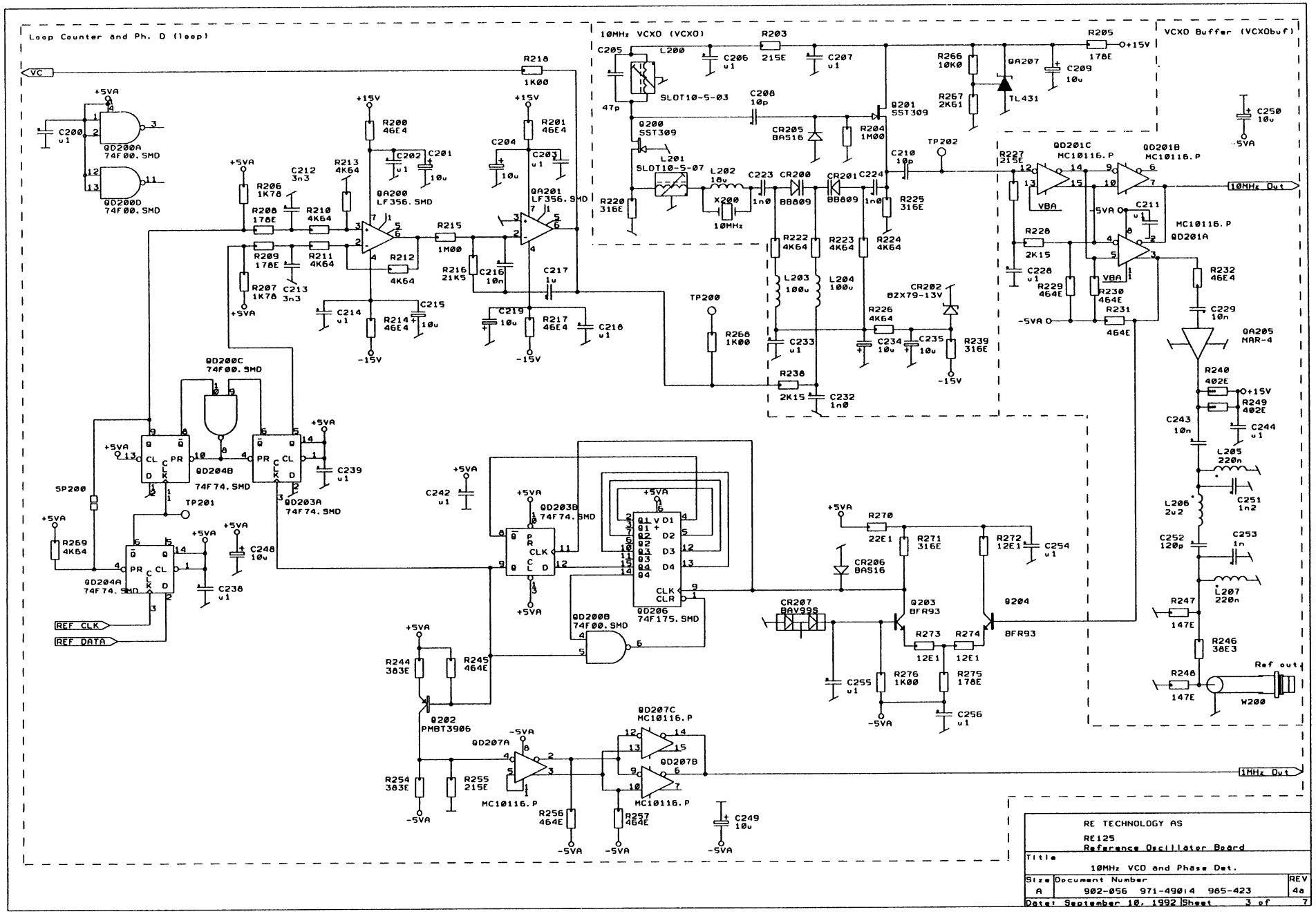
Loop Counter and Ph. D (loop)
10MHz VCXO (VCXO)
VCXO Buffer (VCXObuf)
VC
REF CLK
REF DATA
10MHz Out
1MHz Out
Ref out
RE TECHNOLOGY AS
RE125
Reference Oscillator Board
Title
10MHz VCO and Phase Det.
Size A
Document Number 902-056 971-49014 985-423
REV 4a
Date: September 10, 1992
Sheet 3 of 7

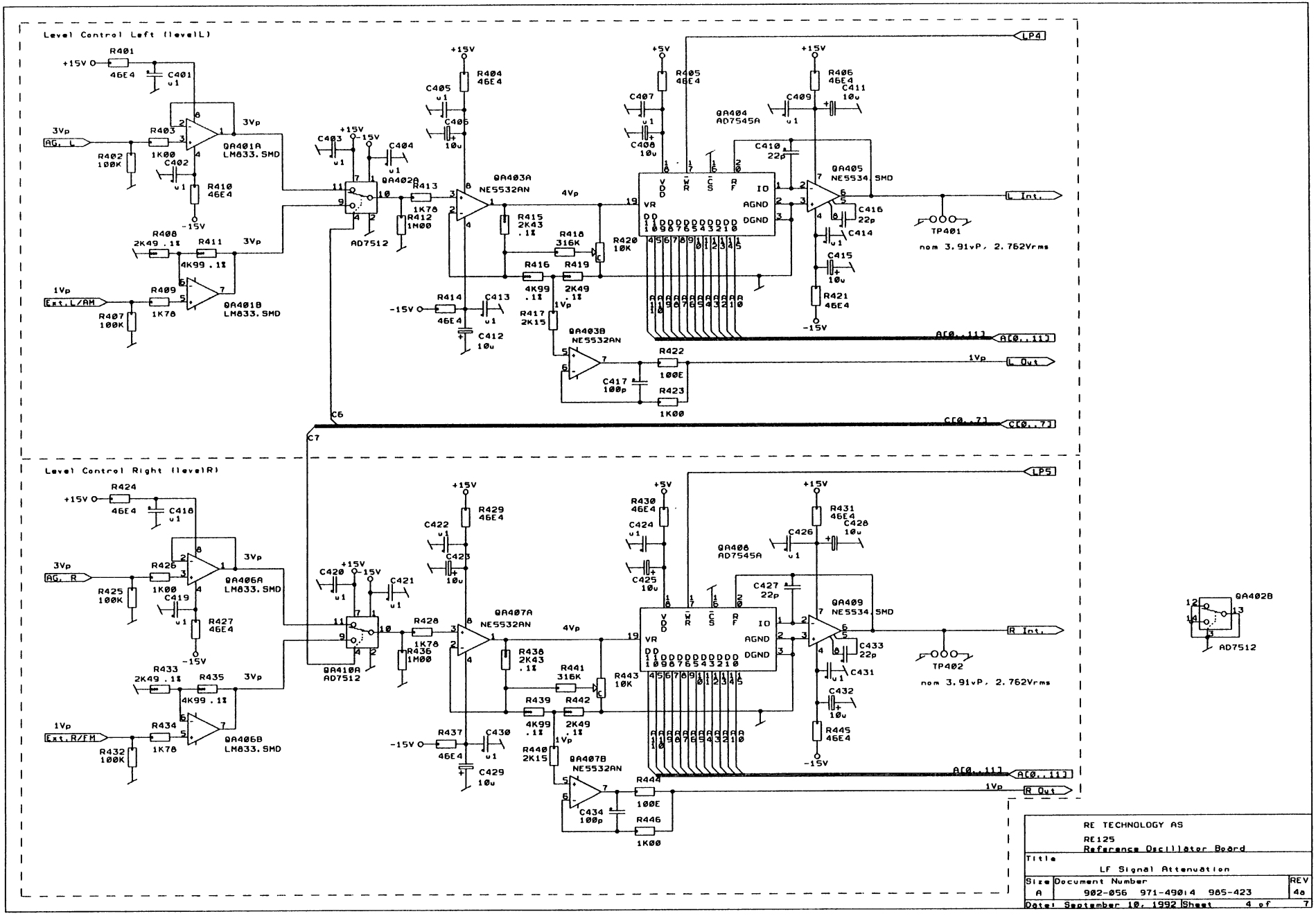
Level Control Left (levelL)
Level Control Right (levelR)
QA401A LM833.SMD
QA401B LM833.SMD
QA402A AD7512
QA403A NE5532AN
QA403B NE5532AN
QA404 AD7545A
QA405 NE5534.SMD
QA406A LM833.SMD
QA406B LM833.SMD
QA407A NE5532AN
QA407B NE5532AN
QA408 AD7545A
QA409 NE5534.SMD
QA410A AD7512
QA402B AD7512
AG. L
AG. R
Ext.L/AM
Ext.R/FM
L Int.
R Int.
L Out
R Out
LP4
LP5
TP401
TP402
nom 3.91vP, 2.762Vrms
A[0..11]
C[0..7]
RE TECHNOLOGY AS
RE125
Reference Oscillator Board
Title
LF Signal Attenuation
Size A
Document Number 902-056 971-49014 985-423
REV 4a
Date: September 10, 1992
Sheet 4 of 7

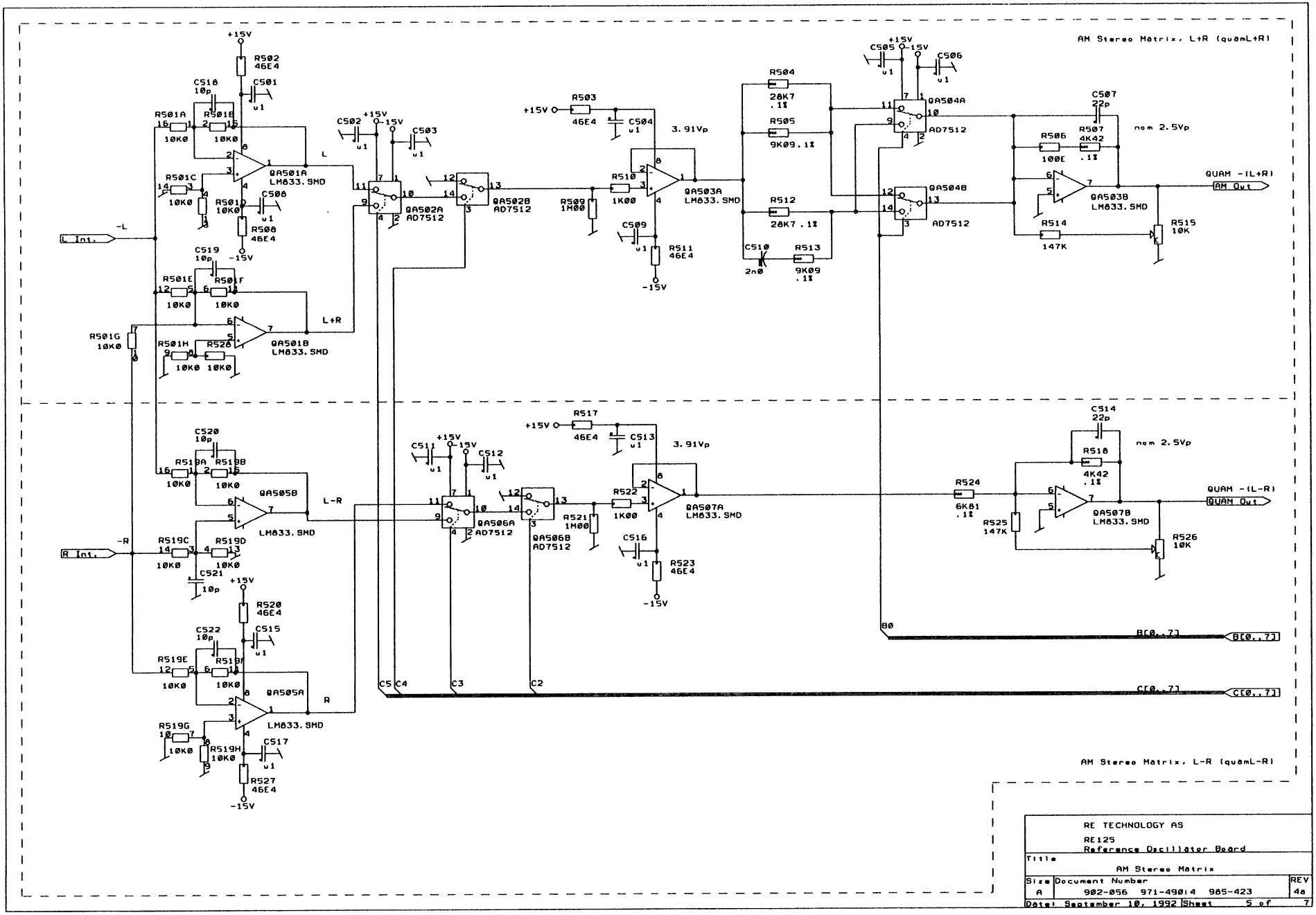

RE TECHNOLOGY AS

RE125
Reference Oscillator Board

Title	AM Stereo Matrix	
Size A	Document Number 902-056 971-49014 985-423	REV 4a
Date: September 10, 1992	Sheet 5 of 7	

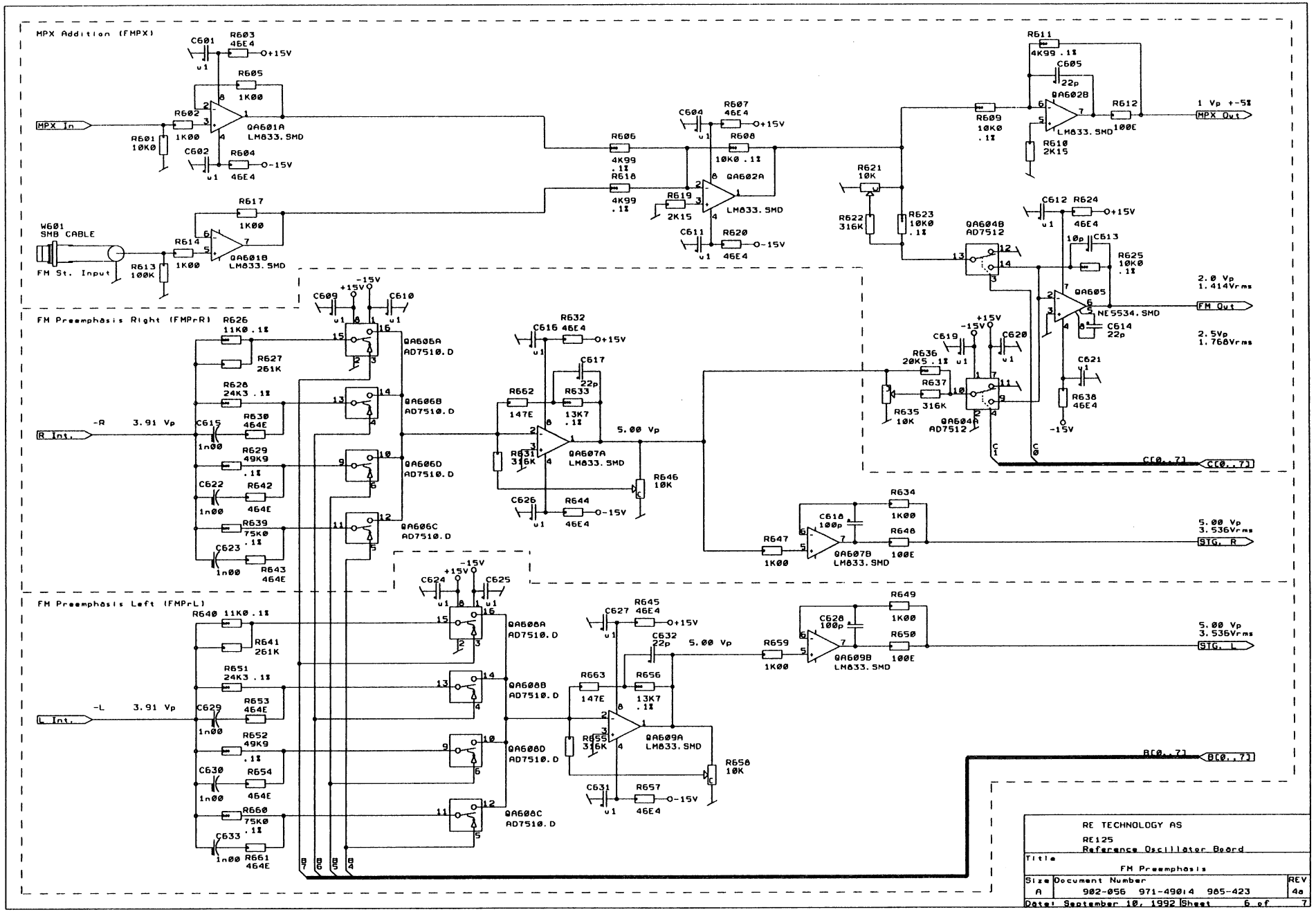
MPX Addition (FMPX)
MPX In
W601
SMB CABLE
FM St. Input
QA601A
LM833.SMD
QA601B
LM833.SMD
QA602A
LM833.SMD
QA602B
LM833.SMD
QA604B
AD7512
QA605
NE5534.SMD
1 Vp +-5%
MPX Out
2.0 Vp
1.414Vrms
FM Out
2.5Vp
1.768Vrms
C[0..7]
FM Preemphasis Right (FMPrR)
R Int.
-R
3.91 Vp
QA606A
AD7510.D
QA606B
AD7510.D
QA606D
AD7510.D
QA606C
AD7510.D
QA607A
LM833.SMD
QA604A
AD7512
5.00 Vp
QA607B
LM833.SMD
5.00 Vp
3.536Vrms
STIG. R
FM Preemphasis Left (FMPrL)
L Int.
-L
3.91 Vp
QA608A
AD7510.D
QA608B
AD7510.D
QA608D
AD7510.D
QA608C
AD7510.D
QA609A
LM833.SMD
QA609B
LM833.SMD
5.00 Vp
3.536Vrms
STIG. L
B[0..7]
RE TECHNOLOGY AS
RE125
Reference Oscillator Board
Title
FM Preemphasis
Size
A
Document Number
902-056 971-49014 985-423
REV
4a
Date: September 10, 1992
Sheet 6 of 7

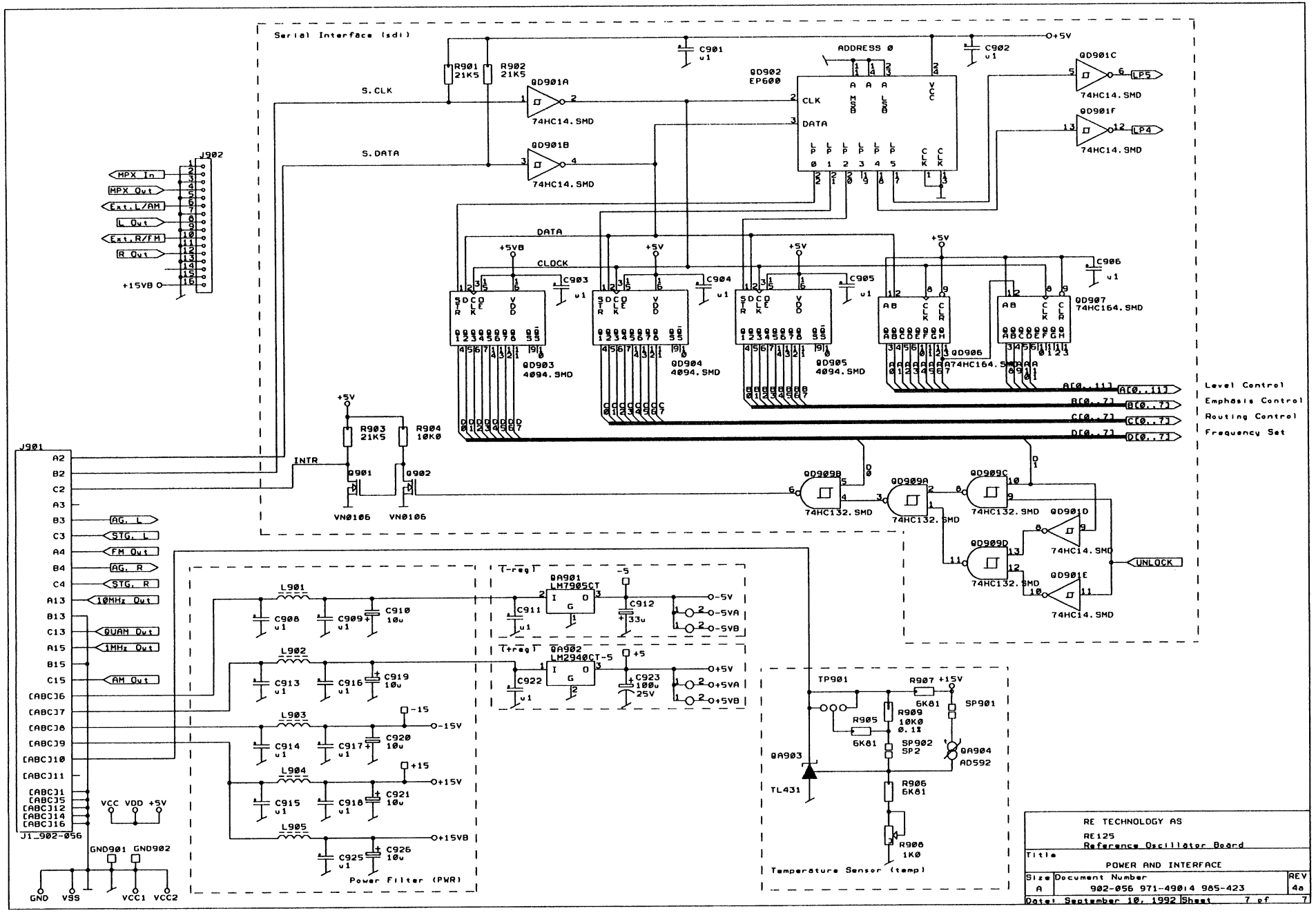
Serial Interface (sdi)
S.CLK
S.DATA
DATA
CLOCK
INTR
ADDRESS 0
QD902
EP600
CLK
DATA
QD901A
QD901B
QD901C
QD901D
QD901E
QD901F
74HC14.SMD
QD903
4094.SMD
QD904
4094.SMD
QD905
4094.SMD
QD906
74HC164.SMD
QD907
74HC164.SMD
QD908
74HC132.SMD
QD909A
QD909B
QD909C
QD909D
VN0106
J902
MPX In
MPX Out
Ext.L/AM
L Out
Ext.R/FM
R Out
+15VB
J901
AG. L
STG. L
FM Out
AG. R
STG. R
10MHz Out
QUAM Out
1MHz Out
AM Out
J1_902-056
VCC VDD +5V
GND901 GND902
GND VSS VCC1 VCC2
Level Control
Emphasis Control
Routing Control
Frequency Set
UNLOCK
QA901
LM7905CT
QA902
LM2940CT-5
T-reg
-5V
-5VA
-5VB
+5V
+5VA
+5VB
-15V
+15V
+15VB
Power Filter (PWR)
TP901
SP901
SP902
QA903
TL431
QA904
AD592
Temperature Sensor (temp)
RE TECHNOLOGY AS
RE125
Reference Oscillator Board
Title
POWER AND INTERFACE
Size A
Document Number 902-056 971-49014 985-423
REV 4a
Date: September 10, 1992
Sheet 7 of 7

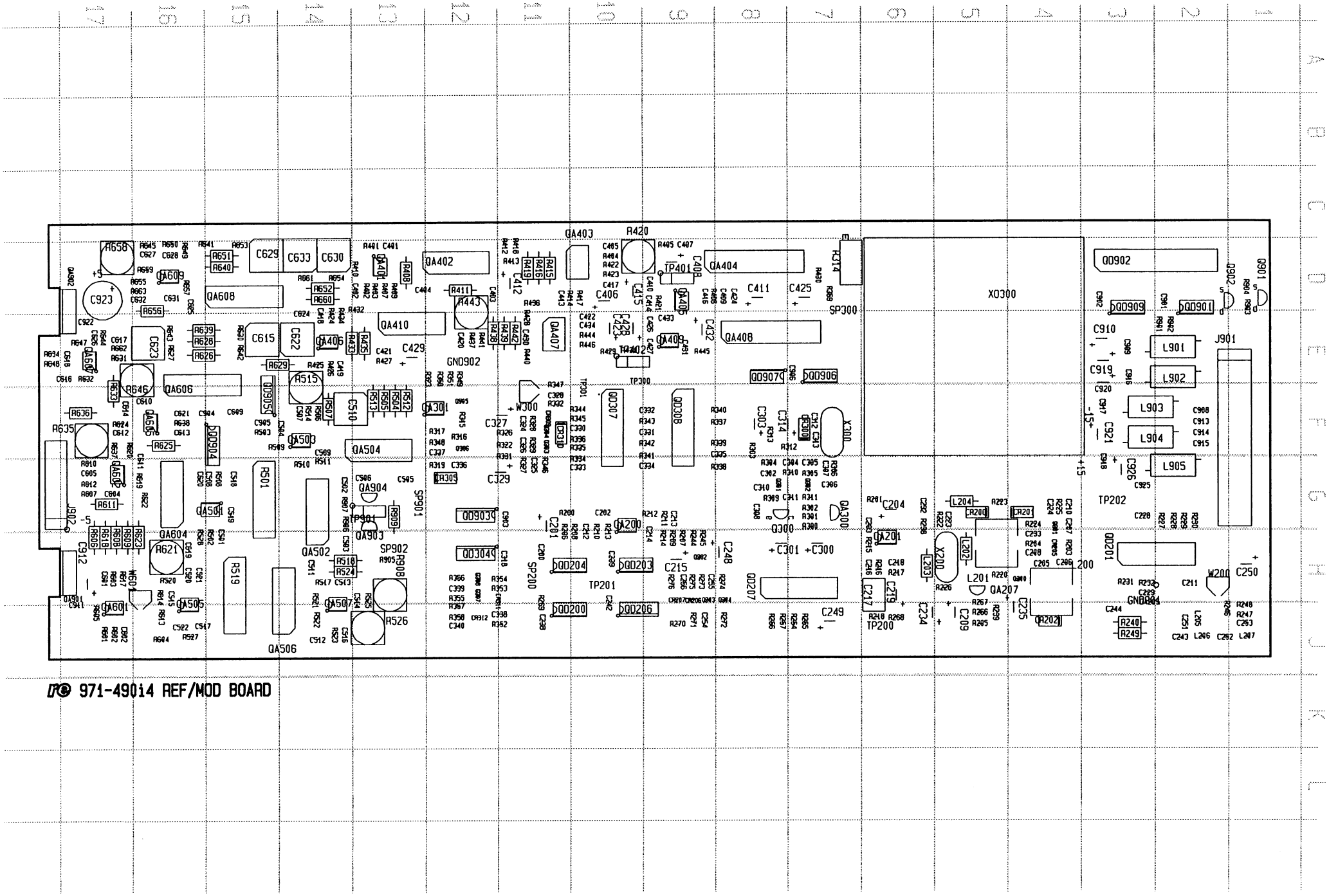

971-49014 REF/MOD BOARD

COMP	LOC	COMP	LOC	COMP	LOC	COMP	LOC	COMP	LOC	COMP	LOC	COMP	LOC	COMP	LOC	COMP	LOC	COMP	LOC	COMP	LOC	COMP	LOC
+5	D17	C326	F11	C609	F15	QA404	D8	R217	H6	R346	G11	R517	H14	R903	D1								
+15	G3	C327	F11	C610	F16	QA405	D9	R218	J6	R347	F11	R518	H13	R904	D1								
-5	G17	C328	F11	C611	F16	QA406	E14	R220	H5	R348	F12	R519	H15	R905	H13								
-15	F3	C329	G11	C612	F17	QA407	E11	R222	G5	R349	F12	R520	H16	R906	G14								
CR200	G5	C330	F10	C613	F16	QA408	E8	R223	G5	R350	E12	R521	J14	R907	G14								
CR201	G4	C331	F10	C614	F17	QA409	E9	R224	G4	R351	F12	R522	J14	R908	H13								
CR202	J4	C332	F10	C615	E15	QA410	E13	R225	G4	R352	J12	R523	J14	R909	G13								
CR205	H4	C333	G10	C616	E18	QA501	G15	R226	H5	R353	H11	R524	H14	SP200	H11								
CR206	J9	C334	G10	C617	E17	QA502	H14	R227	G2	R354	H11	R525	H13	SP300	E7								
CR207	H9	C335	G9	C618	E17	QA503	F14	R228	G2	R355	H12	R526	J13	SP901	G13								
CR300	F7	C336	G12	C619	H16	QA504	F13	R229	G2	R356	H12	R527	J16	SP902	H13								
CR305	G12	C337	F12	C620	G16	QA505	J16	R230	G2	R357	J12	R528	G16	TP200	J6								
CR309	F11	C338	J11	C621	F16	QA506	J14	R231	H3	R358	J12	R601	J17	TP201	H10								
CR310	F11	C339	H12	C622	E14	QA507	J14	R232	H3	R359	D7	R602	J17	TP202	G3								
CR311	H12	C340	J12	C623	E16	QA601	J17	R238	H6	R401	D13	R603	H17	TP300	E10								
CR312	J12	C401	D13	C624	D14	QA602	G17	R239	J5	R402	D13	R604	J16	TP301	E10								
C200	H11	C402	D13	C625	D16	QA604	G16	R240	J3	R403	D13	R605	J17	TP401	D9								
C201	G11	C403	D12	C626	E17	QA605	F16	R244	H9	R404	D10	R606	H17	TP402	E10								
C202	G10	C404	D13	C627	D16	QA606	E16	R245	H9	R405	D9	R607	G17	TP901	G14								
C203	G6	C405	D10	C628	D16	QA607	E17	R246	J1	R406	D8	R608	G17	W200	H1								
C204	G6	C406	D10	C629	D15	QA608	D15	R247	J1	R407	D13	R609	H17	W300	F11								
C205	H4	C407	D9	C630	D14	QA609	D16	R248	J1	R408	D13	R610	G17	W601	H16								
C206	H4	C408	D9	C631	D16	QA901	H17	R249	J3	R409	D13	R611	G17	XD300	D5								
C207	H4	C409	D8	C632	D17	QA902	D17	R254	J7	R410	D13	R612	G17	X200	H5								
C208	H4	C410	D9	C633	D14	QA903	H13	R255	J7	R411	D12	R613	J16	X300	F7								
C209	J5	C411	D8	C901	D2	QA904	G13	R256	J8	R412	D11	R614	H16										
C210	G4	C412	D11	C902	D3	QD200	J11	R257	J8	R413	D11	R617	H17										
C211	H2	C413	D11	C903	G11	QD201	H3	R266	J5	R414	D10	R618	H17										
C212	H10	C414	D9	C904	F16	QD203	H10	R267	H5	R415	D11	R619	G16										
C213	G9	C415	D10	C905	F15	QD204	H11	R268	J6	R416	D11	R620	F17										
C214	H9	C416	D9	C906	E7	QD206	J10	R269	J11	R417	D10	R621	H16										
C215	H9	C417	D10	C908	F2	QD207	H8	R270	J9	R418	D11	R622	G16										
C216	H6	C418	E14	C909	E3	QD304	H12	R271	J9	R419	D11	R623	H16										
C217	H6	C419	E14	C910	E3	QD307	F10	R272	J8	R420	C9	R624	F17										
C218	H6	C420	E12	C911	J17	QD308	F9	R273	H9	R421	D9	R625	F16										
C219	H6	C421	E13	C912	H17	QD901	E2	R274	H8	R422	D10	R626	E15										
C223	G5	C422	E10	C913	F2	QD902	D3	R275	H9	R423	D10	R627	E16										
C224	G4	C423	E10	C914	F2	QD903	G12	R276	H9	R424	D14	R628	E16										
C228	G3	C424	D8	C915	F2	QD904	F15	R300	G7	R425	E14	R629	E14										
C229	H3	C425	D7	C916	E3	QD905	F15	R301	G7	R426	E14	R630	E15										
C232	G6	C426	E9	C917	F3	QD906	E7	R302	G7	R427	E13	R631	E17										
C233	H4	C427	E9	C918	F3	QD907	E8	R303	G8	R428	D11	R632	E17										
C234	J6	C428	E10	C919	E3	QD909	E3	R304	G8	R429	E10	R633	E17										
C235	H4	C429	E13	C920	F3	Q200	H4	R305	G7	R430	D7	R634	E18										
C238	J11	C430	E11	C921	F3	Q201	G4	R306	G7	R431	E10	R635	F18										
C239	H10	C431	E9	C922	E17	Q202	H9	R309	G8	R432	D14	R636	F17										
C242	H10	C432	E9	C923	D17	Q203	H9	R310	G8	R433	E13	R637	F17										
C243	J2	C433	E9	C925	G3	Q204	H8	R311	G7	R434	D14	R638	F16										
C244	J3	C434	E10	C926	G3	Q300	H8	R312	F7	R435	E13	R639	E16										
C248	H8	C501	G15	GND901	J3	Q301	G8	R313	F8	R436	D11	R640	D15										
C249	J7	C502	G14	GND902	E12	Q302	G7	R314	D7	R437	E12	R641	D16										
C250	H1	C503	H14	J901	E2	Q303	F11	R315	F12	R438	E12	R642	E15										
C251	J2	C504	F15	J902	G17	Q304	F11	R316	F12	R439	E11	R643	E16										
C252	J2	C505	G13	L200	H4	Q306	F12	R317	F12	R440	E11	R644	E17										
C253	J1	C506	G13	L201	H5	Q307	H12	R319	G12	R441	E12	R645	D16										
C254	J9	C507	F14	L202	H5	Q308	H12	R322	F11	R442	E11	R646	E16										
C255	H9	C508	G15	L203	H6	Q505	F12	R323	F12	R443	D12	R647	E17										
C256	H9	C509	F14	L204	G5	Q901	D1	R326	F12	R444	E10	R648	E18										
C300	H7	C510	F13	L205	J2	Q902	D1	R327	G11	R445	E9	R649	D16										
C301	H8	C511	H14	L206	J2	R200	G10	R328	F11	R446	E10	R650	D16										
C302	G8	C512	J14	L207	J1	R201	G6	R329	F11	R501	G15	R651	D15										
C303	F8	C513	H14	L901	E2	R203	H4	R331	F11	R502	H15	R652	D14										
C304	G8	C514	H13	L902	E2	R204	H4	R332	F11	R503	F15	R653	D15										
C305	G7	C515	H16	L903	F2	R205	J5	R334	F10	R504	F13	R654	D14										
C306	G7	C516	J14	L904	F2	R206	G11	R335	F10	R505	F13	R655	D16										
C307	G7	C517	J16	L905	G2	R207	H9	R336	F10	R506	F14	R656	D16										
C308	G8	C518	G15	QA200	G10	R208	H10	R337	F8	R507	F14	R657	D16										
C310	G8	C519	G15	QA201	H6	R209	H9	R338	G8	R508	G15	R658	D17										
C311	G8	C520	H16	QA205	H2	R210	H10	R339	F9	R509	F14	R659	D16										
C312	F7	C521	H16	QA207	H5	R211	G9	R340	F9	R510	G14	R660	D14										
C313	F7	C522	J16	QA300	G7	R212	G9	R341	F9	R511	G14	R661	D14										
C314	F8	C601	H17	QA301	F13	R213	H10	R342	F10	R512	F13	R662	E17										
C318	H11	C602	J17	QA401	D13	R214	H9	R343	F10	R513	F13	R663	D16										
C324	F11	C604	G17	QA402	D12	R215	H6	R344	F10	R514	F14	R901	E2										
C325	G11	C605	G17	QA403	C11	R216	H6	R345	F10	R515	E14	R902	E2										

COMPONENT SIDE

Reference/Modulation Board (902056)

CAPACITORS

C 200	Ceramic Chip X7R 100n 20% 50V, size 1206	217006
C 201	C Solid Aluminium 10u 20% 16V Short Type	265108
C 202	Ceramic Chip X7R 100n 20% 50V, size 1206	217006
C 203	Ceramic Chip X7R 100n 20% 50V, size 1206	217006
C 204	C Solid Aluminium 10u 20% 16V Short Type	265108
C 205	Ceramic Chip NP0 47p 5% 63V, size 1206	217014
C 206	Ceramic Chip X7R 100n 20% 50V, size 1206	217006
C 207	Ceramic Chip X7R 100n 20% 50V, size 1206	217006
C 208	Ceramic Chip NP0 10p 5% 63V, size 1206	217012
C 209	C Solid Aluminium 10u 20% 16V Short Type	265108
C 210	Ceramic Chip NP0 10p 5% 63V, size 1206	217012
C 211	Ceramic Chip X7R 100n 20% 50V, size 1206	217006
C 212	Ceramic Chip NP0 3n3 5% 63V, size 1206	217043
C 213	Ceramic Chip NP0 3n3 5% 63V, size 1206	217043
C 214	Ceramic Chip X7R 100n 20% 50V, size 1206	217006
C 215	C Solid Aluminium 10u 20% 16V Short Type	265108
C 216	Ceramic Chip X7R 10n 20% 63V, size 1206	217020
C 217	MKT, 1/63/10, R:6*11.5*7.2, RM2	241064
C 218	Ceramic Chip X7R 100n 20% 50V, size 1206	217006
C 219	C Solid Aluminium 10u 20% 16V Short Type	265108
C 223	Ceramic Chip NP0 1n 5% 63V, size 1206	217005
C 224	Ceramic Chip NP0 1n 5% 63V, size 1206	217005
C 228	Ceramic Chip X7R 100n 20% 50V, size 1206	217006
C 229	Ceramic Chip X7R 10n 20% 63V, size 1206	217020
C 232	Ceramic Chip NP0 1n 5% 63V, size 1206	217005
C 233	Ceramic Chip X7R 100n 20% 50V, size 1206	217006
C 234	C Solid Aluminium 10u 20% 16V Short Type	265108
C 235	C Solid Aluminium 10u 20% 16V Short Type	265108
C 238	Ceramic Chip X7R 100n 20% 50V, size 1206	217006
C 239	Ceramic Chip X7R 100n 20% 50V, size 1206	217006
C 242	Ceramic Chip X7R 100n 20% 50V, size 1206	217006
C 243	Ceramic Chip X7R 10n 20% 63V, size 1206	217020
C 244	Ceramic Chip X7R 100n 20% 50V, size 1206	217006
C 248	C Solid Aluminium 10u 20% 16V Short Type	265108
C 249	C Solid Aluminium 10u 20% 16V Short Type	265108
C 250	C Solid Aluminium 10u 20% 16V Short Type	265108
C 251	Ceramic Chip NP0 1n2 5% 63V, size 1206	217041
C 252	Ceramic Chip NP0 120p 5% 63V, size 1206	217036
C 253	Ceramic Chip NP0 1n 5% 63V, size 1206	217005
C 254	Ceramic Chip X7R 100n 20% 50V, size 1206	217006
C 255	Ceramic Chip X7R 100n 20% 50V, size 1206	217006
C 256	Ceramic Chip X7R 100n 20% 50V, size 1206	217006
C 300	C Solid Aluminium 10u 20% 16V Short Type	265108
C 301	C Solid Aluminium 10u 20% 16V Short Type	265108
C 302	Ceramic Chip X7R 100n 20% 50V, size 1206	217006
C 303	C Solid Aluminium 10u 20% 16V Short Type	265108
C 304	Ceramic Chip NP0 10p 5% 63V, size 1206	217012
C 305	Ceramic Chip NP0 1n 5% 63V, size 1206	217005
C 306	Ceramic Chip X7R 100n 20% 50V, size 1206	217006
C 307	Ceramic Chip NP0 10p 5% 63V, size 1206	217012

C 308	Ceramic Chip X7R 100n 20% 50V, size 1206	217006
C 310	Ceramic Chip NP0 1n 5% 63V, size 1206	217005
C 311	Ceramic Chip NP0 180p 5% 63V, size 1206	217028
C 312	Ceramic Chip NP0 15p 5% 63V, size 1206	217002
C 313	Ceramic Chip NP0 22p 5% 63V, size 1206	217003
C 314	C Solid Aluminium 10u 20% 16V Short Type	265108
C 318	Ceramic Chip X7R 100n 20% 50V, size 1206	217006
C 324	Ceramic Chip X7R 100n 20% 50V, size 1206	217006
C 325	Ceramic Chip X7R 100n 20% 50V, size 1206	217006
C 326	Ceramic Chip X7R 10n 20% 63V, size 1206	217020
C 327	C Solid Aluminium 10u 20% 16V Short Type	265108
C 328	Ceramic Chip X7R 100n 20% 50V, size 1206	217006
C 329	C Solid Aluminium 10u 20% 16V Short Type	265108
C 330	Ceramic Chip X7R 100n 20% 50V, size 1206	217006
C 331	Ceramic Chip X7R 100n 20% 50V, size 1206	217006
C 332	Ceramic Chip X7R 100n 20% 50V, size 1206	217006
C 333	Ceramic Chip X7R 100n 20% 50V, size 1206	217006
C 334	Ceramic Chip X7R 100n 20% 50V, size 1206	217006
C 335	Ceramic Chip X7R 100n 20% 50V, size 1206	217006
C 336	Ceramic Chip X7R 100n 20% 50V, size 1206	217006
C 337	Ceramic Chip X7R 100n 20% 50V, size 1206	217006
C 338	Ceramic Chip X7R 100n 20% 50V, size 1206	217006
C 339	Ceramic Chip X7R 100n 20% 50V, size 1206	217006
C 340	Ceramic Chip X7R 100n 20% 50V, size 1206	217006
C 401	Ceramic Chip X7R 100n 20% 50V, size 1206	217006
C 402	Ceramic Chip X7R 100n 20% 50V, size 1206	217006
C 403	Ceramic Chip X7R 100n 20% 50V, size 1206	217006
C 404	Ceramic Chip X7R 100n 20% 50V, size 1206	217006
C 405	Ceramic Chip X7R 100n 20% 50V, size 1206	217006
C 406	C Solid Aluminium 10u 20% 16V Short Type	265108
C 407	Ceramic Chip X7R 100n 20% 50V, size 1206	217006
C 408	C Solid Aluminium 10u 20% 16V Short Type	265108
C 409	Ceramic Chip X7R 100n 20% 50V, size 1206	217006
C 410	Ceramic Chip NP0 22p 5% 63V, size 1206	217003
C 411	C Solid Aluminium 10u 20% 16V Short Type	265108
C 412	C Solid Aluminium 10u 20% 16V Short Type	265108
C 413	Ceramic Chip X7R 100n 20% 50V, size 1206	217006
C 414	Ceramic Chip X7R 100n 20% 50V, size 1206	217006
C 415	C Solid Aluminium 10u 20% 16V Short Type	265108
C 416	Ceramic Chip NP0 22p 5% 63V, size 1206	217003
C 417	Ceramic Chip NP0 100p 5% 63V, size 1206	217004
C 418	Ceramic Chip X7R 100n 20% 50V, size 1206	217006
C 419	Ceramic Chip X7R 100n 20% 50V, size 1206	217006
C 420	Ceramic Chip X7R 100n 20% 50V, size 1206	217006
C 421	Ceramic Chip X7R 100n 20% 50V, size 1206	217006
C 422	Ceramic Chip X7R 100n 20% 50V, size 1206	217006
C 423	C Solid Aluminium 10u 20% 16V Short Type	265108
C 424	Ceramic Chip X7R 100n 20% 50V, size 1206	217006
C 425	C Solid Aluminium 10u 20% 16V Short Type	265108
C 426	Ceramic Chip X7R 100n 20% 50V, size 1206	217006
C 427	Ceramic Chip NP0 22p 5% 63V, size 1206	217003
C 428	C Solid Aluminium 10u 20% 16V Short Type	265108
C 429	C Solid Aluminium 10u 20% 16V Short Type	265108
C 430	Ceramic Chip X7R 100n 20% 50V, size 1206	217006

C 431	Ceramic Chip X7R 100n 20% 50V, size 1206	217006
C 432	C Solid Aluminium 10u 20% 16V Short Type	265108
C 433	Ceramic Chip NP0 22p 5% 63V, size 1206	217003
C 434	Ceramic Chip NP0 100p 5% 63V, size 1206	217004
C 501	Ceramic Chip X7R 100n 20% 50V, size 1206	217006
C 502	Ceramic Chip X7R 100n 20% 50V, size 1206	217006
C 503	Ceramic Chip X7R 100n 20% 50V, size 1206	217006
C 504	Ceramic Chip X7R 100n 20% 50V, size 1206	217006
C 505	Ceramic Chip X7R 100n 20% 50V, size 1206	217006
C 506	Ceramic Chip X7R 100n 20% 50V, size 1206	217006
C 507	Ceramic Chip NP0 22p 5% 63V, size 1206	217003
C 508	Ceramic Chip X7R 100n 20% 50V, size 1206	217006
C 509	Ceramic Chip X7R 100n 20% 50V, size 1206	217006
C 510	C Polyst 2n00 1% 63V	243305
C 511	Ceramic Chip X7R 100n 20% 50V, size 1206	217006
C 512	Ceramic Chip X7R 100n 20% 50V, size 1206	217006
C 513	Ceramic Chip X7R 100n 20% 50V, size 1206	217006
C 514	Ceramic Chip NP0 22p 5% 63V, size 1206	217003
C 515	Ceramic Chip X7R 100n 20% 50V, size 1206	217006
C 516	Ceramic Chip X7R 100n 20% 50V, size 1206	217006
C 517	Ceramic Chip X7R 100n 20% 50V, size 1206	217006
C 518	Ceramic Chip NP0 10p 5% 63V, size 1206	217012
C 519	Ceramic Chip NP0 10p 5% 63V, size 1206	217012
C 520	Ceramic Chip NP0 10p 5% 63V, size 1206	217012
C 521	Ceramic Chip NP0 10p 5% 63V, size 1206	217012
C 522	Ceramic Chip NP0 10p 5% 63V, size 1206	217012
C 601	Ceramic Chip X7R 100n 20% 50V, size 1206	217006
C 602	Ceramic Chip X7R 100n 20% 50V, size 1206	217006
C 604	Ceramic Chip X7R 100n 20% 50V, size 1206	217006
C 605	Ceramic Chip NP0 22p 5% 63V, size 1206	217003
C 609	Ceramic Chip X7R 100n 20% 50V, size 1206	217006
C 610	Ceramic Chip X7R 100n 20% 50V, size 1206	217006
C 611	Ceramic Chip X7R 100n 20% 50V, size 1206	217006
C 612	Ceramic Chip X7R 100n 20% 50V, size 1206	217006
C 613	Ceramic Chip NP0 10p 5% 63V, size 1206	217012
C 614	Ceramic Chip NP0 22p 5% 63V, size 1206	217003
C 615	C Polyst 1n00 1% 63V	243304
C 616	Ceramic Chip X7R 100n 20% 50V, size 1206	217006
C 617	Ceramic Chip NP0 22p 5% 63V, size 1206	217003
C 618	Ceramic Chip NP0 100p 5% 63V, size 1206	217004
C 619	Ceramic Chip X7R 100n 20% 50V, size 1206	217006
C 620	Ceramic Chip X7R 100n 20% 50V, size 1206	217006
C 621	Ceramic Chip X7R 100n 20% 50V, size 1206	217006
C 622	C Polyst 1n00 1% 63V	243304
C 623	C Polyst 1n00 1% 63V	243304
C 624	Ceramic Chip X7R 100n 20% 50V, size 1206	217006
C 625	Ceramic Chip X7R 100n 20% 50V, size 1206	217006
C 626	Ceramic Chip X7R 100n 20% 50V, size 1206	217006
C 627	Ceramic Chip X7R 100n 20% 50V, size 1206	217006
C 628	Ceramic Chip NP0 100p 5% 63V, size 1206	217004
C 629	C Polyst 1n00 1% 63V	243304
C 630	C Polyst 1n00 1% 63V	243304
C 631	Ceramic Chip X7R 100n 20% 50V, size 1206	217006
C 632	Ceramic Chip NP0 22p 5% 63V, size 1206	217003

C 633	C Polyst 1n00 1% 63V	243304
C 901	Ceramic Chip X7R 100n 20% 50V, size 1206	217006
C 902	Ceramic Chip X7R 100n 20% 50V, size 1206	217006
C 903	Ceramic Chip X7R 100n 20% 50V, size 1206	217006
C 904	Ceramic Chip X7R 100n 20% 50V, size 1206	217006
C 905	Ceramic Chip X7R 100n 20% 50V, size 1206	217006
C 906	Ceramic Chip X7R 100n 20% 50V, size 1206	217006
C 908	Ceramic Chip X7R 100n 20% 50V, size 1206	217006
C 909	Ceramic Chip X7R 100n 20% 50V, size 1206	217006
C 910	C Solid Aluminium 10u 20% 16V Short Type	265108
C 911	Ceramic Chip X7R 100n 20% 50V, size 1206	217006
C 912	C Solid Aluminium 33u 20% 10V Short Type	265105
C 913	Ceramic Chip X7R 100n 20% 50V, size 1206	217006
C 914	Ceramic Chip X7R 100n 20% 50V, size 1206	217006
C 915	Ceramic Chip X7R 100n 20% 50V, size 1206	217006
C 916	Ceramic Chip X7R 100n 20% 50V, size 1206	217006
C 917	Ceramic Chip X7R 100n 20% 50V, size 1206	217006
C 918	Ceramic Chip X7R 100n 20% 50V, size 1206	217006
C 919	C Solid Aluminium 10u 20% 16V Short Type	265108
C 920	C Solid Aluminium 10u 20% 16V Short Type	265108
C 921	C Solid Aluminium 10u 20% 16V Short Type	265108
C 922	Ceramic Chip X7R 100n 20% 50V, size 1206	217006
C 923	Electrolytic 100/25, 2000h/85°, R:6.3*11, RM2	261073
C 925	Ceramic Chip X7R 100n 20% 50V, size 1206	217006
C 926	C Solid Aluminium 10u 20% 16V Short Type	265108

DIODES

CR 200	Diode cap BB809 Vr-28V Ir-10nA	350063
CR 201	Diode cap BB809 Vr-28V Ir-10nA	350063
CR 202	Diode Zener BZX79-C13V 0.4W	350634
CR 205	Diode general purpose BAS16 SOT23	352006
CR 206	Diode general purpose BAS16 SOT23	352006
CR 207	Diode BAV99 silicon planar epitaxial high-speed SOT23	352002
CR 300	Diode cap BB 405B Vr-30V Ir-10nA	350069
CR 305	Diode Zener BZX79-C12V 0.4W	350605
CR 309	Diode BAV99 silicon planar epitaxial high-speed SOT23	352002
CR 310	Diode Zener BZX79-C4V7 0.4W	350642
CR 311	Diode general purpose BAS16 SOT23	352006
CR 312	Diode BAV99 silicon planar epitaxial high-speed SOT23	352002

CONNECTORS

J 901	DIN 41612 64 pol male 90°, C/2 class II	805958
J 902	DIN 41651 header 16Pol Angled	806150

CHOKES

L 200	HF Coil 3u25 Adjustable 5-03	740226
L 201	Coil Slot-Ten 7,7-18,4uH	740236
L 202	Choke Mini 18u 5%	703076
L 203	Choke HF Mini 100U/10% 192MA	703009
L 204	Choke HF Mini 100U/10% 192MA	703009
L 205	Chip Coil 220n 10%	703812

L 206	Chip Coil 2u2 10%	703803
L 207	Chip Coil 220n 10%	703812
L 901	RF-choke six-hole core green	731204
L 902	RF-choke six-hole core green	731204
L 903	RF-choke six-hole core green	731204
L 904	RF-choke six-hole core green	731204
L 905	RF-choke six-hole core green	731204

TRANSISTORS

Q 200	Transistor SST309 Jfet N-Channel SOT-23	361007
Q 201	Transistor SST309 Jfet N-Channel SOT-23	361007
Q 202	Transistor PMBT3906 Sot89pnp	361016
Q 203	Transistor BFR93A SMD npn	361002
Q 204	Transistor BFR93A SMD npn	361002
Q 300	Transistor BC337 npn	360180
Q 301	Transistor SST309 Jfet N-Channel SOT-23	361007
Q 302	Transistor SST309 Jfet N-Channel SOT-23	361007
Q 303	Transistor PMBT3906 Sot89pnp	361016
Q 304	Transistor PMBT3906 Sot89pnp	361016
Q 306	Transistor BC849C Sot23	361009
Q 307	Transistor BFR93A SMD npn	361002
Q 308	Transistor BFR93A SMD npn	361002
Q 505	Transistor BC857B PNP SOT23	361010
Q 901	Transistor VN0106N3 Power Mos N-CH	360245
Q 902	Transistor VN0106N3 Power Mos N-CH	360245

INTEGRATED ANALOG CIRCUITS

QA 200	IC LM356 Op-Amp So8	366021
QA 201	IC LM356 Op-Amp So8	366021
QA 205	IC MAR-4 Monolithic RF Amplifier	364823
QA 207	IC TL431 ADJ. Precision Shunt Regulators	364849
QA 300	IC TL431 ADJ. Precision Shunt Regulators	364849
QA 301	IC LM393M Dual Comparator SO8	366051
QA 401	IC LM833 Low Noise Dual OPA SO8	366024
QA 402	IC AD7512DI dual switch	364547
QA 403	IC NE5532A Dual OP-Amp low noise	364640
QA 404	IC AD7545 dac 12bit	364793
QA 405	IC 5534 Low Noise Op-amp SO-8	366015
QA 406	IC LM833 Low Noise Dual OPA SO8	366024
QA 407	IC NE5532A Dual OP-Amp low noise	364640
QA 408	IC AD7545 dac 12bit	364793
QA 409	IC 5534 Low Noise Op-amp SO-8	366015
QA 410	IC AD7512DI dual switch	364547
QA 501	IC LM833 Low Noise Dual OPA SO8	366024
QA 502	IC AD7512DI dual switch	364547
QA 503	IC LM833 Low Noise Dual OPA SO8	366024
QA 504	IC AD7512DI dual switch	364547
QA 505	IC LM833 Low Noise Dual OPA SO8	366024
QA 506	IC AD7512DI dual switch	364547
QA 507	IC LM833 Low Noise Dual OPA SO8	366024
QA 601	IC LM833 Low Noise Dual OPA SO8	366024
QA 602	IC LM833 Low Noise Dual OPA SO8	366024

QA 604	IC AD7512DI dual switch	364547
QA 605	IC 5534 Low Noise Op-amp SO-8	366015
QA 606	IC AD7510 Analog Switches	364896
QA 607	IC LM833 Low Noise Dual OPA SO8	366024
QA 608	IC AD7510 Analog Switches	364896
QA 609	IC LM833 Low Noise Dual OPA SO8	366024
QA 901	IC L7905CT - 5V regulator	364884
QA 902	IC LM2940T-5 L.dropout 5V Regulator	364883
QA 903	IC TL431 ADJ. Precision Shunt Regulators	364849
QA 904	IC AD592AN Temp.Transducer	365044

INTEGRATED DIGITAL CIRCUITS

QD 200	IC 74F00 Quad 2-Inp Nand SO14	366050
QD 201	IC 10116 tripl line rec.	364331
QD 203	IC 74F74 D-FF So-14	366003
QD 204	IC 74F74 D-FF So-14	366003
QD 206	IC 74F175 Quad FF SO16	366049
QD 207	IC 10116 tripl line rec.	364331
QD 304	IC 74F169D 4-Bit Up/Down Counter Sol 16	366005
QD 307	IC 10116 tripl line rec.	364331
QD 308	IC 10102 quad NOR gate	364322
QD 901	IC 74HC14 Hex Inv Schmitt Trigger SO-14	366009
QD 902	RExxx Seriel Bus Receiver For 6 Adr. 364-876	369331
QD 903	IC 4094 8-Stage Shift-And-Store Bus Reg SO-16	366011
QD 904	IC 4094 8-Stage Shift-And-Store Bus Reg SO-16	366011
QD 905	IC 4094 8-Stage Shift-And-Store Bus Reg SO-16	366011
QD 906	IC 74HC164 8-Bit Sipo SO14	366048
QD 907	IC 74HC164 8-Bit Sipo SO14	366048
QD 909	IC 74HC132 Quad 2-Inp Nand W.Schmitt Trig	366047

RESISTORS

R 200	Metal Film Chip 46E4 1% 0.2W TC50	147016
R 201	Metal Film Chip 46E4 1% 0.2W TC50	147016
R 203	Metal Film Chip 215E 1% 0.2W TC50	147109
R 204	Metal Film Chip 1M00 1% 0.2W TC50	147084
R 205	Metal Film Chip 178E 1% 0.2W TC50	147046
R 206	Metal Film Chip 1K78 1% 0.2W TC50	147037
R 207	Metal Film Chip 1K78 1% 0.2W TC50	147037
R 208	Metal Film Chip 178E 1% 0.2W TC50	147046
R 209	Metal Film Chip 178E 1% 0.2W TC50	147046
R 210	Metal Film Chip 4K64 1% 0.2W TC50	147043
R 211	Metal Film Chip 4K64 1% 0.2W TC50	147043
R 212	Metal Film Chip 4K64 1% 0.2W TC50	147043
R 213	Metal Film Chip 4K64 1% 0.2W TC50	147043
R 214	Metal Film Chip 46E4 1% 0.2W TC50	147016
R 215	Metal Film Chip 1M00 1% 0.2W TC50	147084
R 216	Metal Film Chip 21K5 1% 0.2W TC50	147066
R 217	Metal Film Chip 46E4 1% 0.2W TC50	147016
R 218	Metal Film Chip 1K00 1% 0.2W TC50	147040
R 220	Metal Film Chip 316E 1% 0.2W TC50	147021
R 222	Metal Film Chip 4K64 1% 0.2W TC50	147043
R 223	Metal Film Chip 4K64 1% 0.2W TC50	147043

R 224	Metal Film Chip 4K64 1% 0.2W TC50	147043
R 225	Metal Film Chip 316E 1% 0.2W TC50	147021
R 226	Metal Film Chip 4K64 1% 0.2W TC50	147043
R 227	Metal Film Chip 215E 1% 0.2W TC50	147109
R 228	Metal Film Chip 2K15 1% 0.2W TC50	147051
R 229	Metal Film Chip 464E 1% 0.2W TC50	147035
R 230	Metal Film Chip 464E 1% 0.2W TC50	147035
R 231	Metal Film Chip 464E 1% 0.2W TC50	147035
R 232	Metal Film Chip 46E4 1% 0.2W TC50	147016
R 238	Metal Film Chip 2K15 1% 0.2W TC50	147051
R 239	Metal Film Chip 316E 1% 0.2W TC50	147021
R 240	R Metal Film 402E 1% 0.5W TC50	113402
R 244	Metal Film Chip 383E 1% 0.2W TC50	147058
R 245	Metal Film Chip 464E 1% 0.2W TC50	147035
R 246	Metal Film Chip 38E3 1% 0.2W TC50	147027
R 247	Metal Film Chip 147E 1% 0.2W TC50	147033
R 248	Metal Film Chip 147E 1% 0.2W TC50	147033
R 249	R Metal Film 402E 1% 0.5W TC50	113402
R 254	Metal Film Chip 383E 1% 0.2W TC50	147058
R 255	Metal Film Chip 215E 1% 0.2W TC50	147109
R 256	Metal Film Chip 464E 1% 0.2W TC50	147035
R 257	Metal Film Chip 464E 1% 0.2W TC50	147035
R 266	Metal Film Chip 10K0 1% 0.2W TC50	147039
R 267	Metal Film Chip 2K61 1% 0.2W TC50	147038
R 268	Metal Film Chip 1K00 1% 0.2W TC50	147040
R 269	Metal Film Chip 4K64 1% 0.2W TC50	147043
R 270	Metal Film Chip 21E5 1% 0.2W TC50	147052
R 271	Metal Film Chip 316E 1% 0.2W TC50	147021
R 272	Metal Film Chip 12E1 1% 0.2W TC50	147023
R 273	Metal Film Chip 12E1 1% 0.2W TC50	147023
R 274	Metal Film Chip 12E1 1% 0.2W TC50	147023
R 275	Metal Film Chip 178E 1% 0.2W TC50	147046
R 276	Metal Film Chip 1K00 1% 0.2W TC50	147040
R 300	Metal Film Chip 215E 1% 0.2W TC50	147109
R 301	Metal Film Chip 10K0 1% 0.2W TC50	147039
R 302	Metal Film Chip 2K61 1% 0.2W TC50	147038
R 303	Metal Film Chip 46E4 1% 0.2W TC50	147016
R 304	Metal Film Chip 215E 1% 0.2W TC50	147109
R 305	Metal Film Chip 1K21 1% 0.2W TC50	147061
R 306	Metal Film Chip 4K64 1% 0.2W TC50	147043
R 309	Metal Film Chip 681E 1% 0.2W TC50	147117
R 310	Metal Film Chip 1M00 1% 0.2W TC50	147084
R 311	Metal Film Chip 681E 1% 0.2W TC50	147117
R 312	Metal Film Chip 10K0 1% 0.2W TC50	147039
R 313	Metal Film Chip 2K15 1% 0.2W TC50	147051
R 314	Cermet Trimpot 20K 10% 0.5W	182428
R 315	Metal Film Chip 21K5 1% 0.2W TC50	147066
R 316	Metal Film Chip 1K78 1% 0.2W TC50	147037
R 317	Metal Film Chip 1K00 1% 0.2W TC50	147040
R 319	Metal Film Chip 464E 1% 0.2W TC50	147035
R 322	Metal Film Chip 26E1 1% 0.2W TC50	147048
R 323	Metal Film Chip 10K0 1% 0.2W TC50	147039
R 326	Metal Film Chip 2K15 1% 0.2W TC50	147051
R 327	Metal Film Chip 1K21 1% 0.2W TC50	147061

R 328	Metal Film Chip 1K21 1% 0.2W TC50	147061
R 329	Metal Film Chip 26E1 1% 0.2W TC50	147048
R 331	Metal Film Chip 1K78 1% 0.2W TC50	147037
R 332	Metal Film Chip 46E4 1% 0.2W TC50	147016
R 334	Metal Film Chip 221E 1% 0.125W TC50	147008
R 335	Metal Film Chip 2K21 1% 0.2W TC50	147060
R 336	Metal Film Chip 464E 1% 0.2W TC50	147035
R 337	Metal Film Chip 464E 1% 0.2W TC50	147035
R 338	Metal Film Chip 464E 1% 0.2W TC50	147035
R 339	Metal Film Chip 464E 1% 0.2W TC50	147035
R 340	Metal Film Chip 464E 1% 0.2W TC50	147035
R 341	Metal Film Chip 464E 1% 0.2W TC50	147035
R 342	Metal Film Chip 464E 1% 0.2W TC50	147035
R 343	Metal Film Chip 464E 1% 0.2W TC50	147035
R 344	Metal Film Chip 221E 1% 0.125W TC50	147008
R 345	Metal Film Chip 383E 1% 0.2W TC50	147058
R 346	Metal Film Chip 2K15 1% 0.2W TC50	147051
R 347	Metal Film Chip 10K0 1% 0.2W TC50	147039
R 348	Metal Film Chip 1K21 1% 0.2W TC50	147061
R 349	Metal Film Chip 1K21 1% 0.2W TC50	147061
R 350	Metal Film Chip 12K1 1% 0.2W TC50	147047
R 351	Metal Film Chip 14K7 1% 0.2W TC50	147113
R 352	Metal Film Chip 21E5 1% 0.2W TC50	147052
R 353	Metal Film Chip 316E 1% 0.2W TC50	147021
R 354	Metal Film Chip 12E1 1% 0.2W TC50	147023
R 355	Metal Film Chip 12E1 1% 0.2W TC50	147023
R 356	Metal Film Chip 12E1 1% 0.2W TC50	147023
R 357	Metal Film Chip 178E 1% 0.2W TC50	147046
R 358	Metal Film Chip 1K00 1% 0.2W TC50	147040
R 359	Metal Film Chip 2K15 1% 0.2W TC50	147051
R 401	Metal Film Chip 46E4 1% 0.2W TC50	147016
R 402	Metal Film Chip 100K 1% 0.2W TC50	147062
R 403	Metal Film Chip 1K00 1% 0.2W TC50	147040
R 404	Metal Film Chip 46E4 1% 0.2W TC50	147016
R 405	Metal Film Chip 46E4 1% 0.2W TC50	147016
R 406	Metal Film Chip 46E4 1% 0.2W TC50	147016
R 407	Metal Film Chip 100K 1% 0.2W TC50	147062
R 408	Metal Film 2K49 0.1% 0.25W TC15	141297
R 409	Metal Film Chip 1K78 1% 0.2W TC50	147037
R 410	Metal Film Chip 46E4 1% 0.2W TC50	147016
R 411	Metal Film 4k99 0.1% 0.25W TC15	140981
R 412	Metal Film Chip 1M00 1% 0.2W TC50	147084
R 413	Metal Film Chip 1K78 1% 0.2W TC50	147037
R 414	Metal Film Chip 46E4 1% 0.2W TC50	147016
R 415	Metal Film 2K43 0.1% 0.25W TC15	141257
R 416	Metal Film 4k99 0.1% 0.25W TC15	140981
R 417	Metal Film Chip 2K15 1% 0.2W TC50	147051
R 418	Metal Film Chip 147K 1% o.2W TC50	147070
R 419	Metal Film 2K49 0.1% 0.25W TC15	141297
R 420	Cermet Trimpot 10K 20% 0.5W TC70	182301
R 421	Metal Film Chip 46E4 1% 0.2W TC50	147016
R 422	Metal Film Chip 100E 1% 0.250W TC50	147014
R 423	Metal Film Chip 1K00 1% 0.2W TC50	147040
R 424	Metal Film Chip 46E4 1% 0.2W TC50	147016

R 425	Metal Film Chip 100K 1% 0.2W TC50	147062
R 426	Metal Film Chip 1K00 1% 0.2W TC50	147040
R 427	Metal Film Chip 46E4 1% 0.2W TC50	147016
R 428	Metal Film Chip 1K78 1% 0.2W TC50	147037
R 429	Metal Film Chip 46E4 1% 0.2W TC50	147016
R 430	Metal Film Chip 46E4 1% 0.2W TC50	147016
R 431	Metal Film Chip 46E4 1% 0.2W TC50	147016
R 432	Metal Film Chip 100K 1% 0.2W TC50	147062
R 433	Metal Film 2K49 0.1% 0.25W TC15	141297
R 434	Metal Film Chip 1K78 1% 0.2W TC50	147037
R 435	Metal Film 4k99 0.1% 0.25W TC15	140981
R 436	Metal Film Chip 1M00 1% 0.2W TC50	147084
R 437	Metal Film Chip 46E4 1% 0.2W TC50	147016
R 438	Metal Film 2K43 0.1% 0.25W TC15	141257
R 439	Metal Film 4k99 0.1% 0.25W TC15	140981
R 440	Metal Film Chip 2K15 1% 0.2W TC50	147051
R 441	Metal Film Chip 147K 1% o.2W TC50	147070
R 442	Metal Film 2K49 0.1% 0.25W TC15	141297
R 443	Cermet Trimpot 10K 20% 0.5W TC70	182301
R 444	Metal Film Chip 100E 1% 0.250W TC50	147014
R 445	Metal Film Chip 46E4 1% 0.2W TC50	147016
R 446	Metal Film Chip 1K00 1% 0.2W TC50	147040
R 501	Thick Film DIL 8*10K 0.1% 0.75W TC50	146034
R 502	Metal Film Chip 46E4 1% 0.2W TC50	147016
R 503	Metal Film Chip 46E4 1% 0.2W TC50	147016
R 504	Metal Film 28K7 0.1% 0.25W TC15	141365
R 505	Metal Film 9K09 0.1% 0.25W TC15	141315
R 506	Metal Film Chip 100E 1% 0.250W TC50	147014
R 507	Metal Film 4K42 0.1% 0.25W TC15	141363
R 508	Metal Film Chip 46E4 1% 0.2W TC50	147016
R 509	Metal Film Chip 1M00 1% 0.2W TC50	147084
R 510	Metal Film Chip 1K00 1% 0.2W TC50	147040
R 511	Metal Film Chip 46E4 1% 0.2W TC50	147016
R 512	Metal Film 28K7 0.1% 0.25W TC15	141365
R 513	Metal Film 9K09 0.1% 0.25W TC15	141315
R 514	Metal Film Chip 147K 1% o.2W TC50	147070
R 515	Cermet Trimpot 10K 20% 0.5W TC70	182301
R 517	Metal Film Chip 46E4 1% 0.2W TC50	147016
R 518	Metal Film 4K42 0.1% 0.25W TC15	141363
R 519	Thick Film DIL 8*10K 0.1% 0.75W TC50	146034
R 520	Metal Film Chip 46E4 1% 0.2W TC50	147016
R 521	Metal Film Chip 1M00 1% 0.2W TC50	147084
R 522	Metal Film Chip 1K00 1% 0.2W TC50	147040
R 523	Metal Film Chip 46E4 1% 0.2W TC50	147016
R 524	Metal Film 6K81 0.1% 0.25W TC15	141362
R 525	Metal Film Chip 147K 1% o.2W TC50	147070
R 526	Cermet Trimpot 10K 20% 0.5W TC70	182301
R 527	Metal Film Chip 46E4 1% 0.2W TC50	147016
R 528	Metal Film Chip 10K0 1% 0.2W TC50	147039
R 601	Metal Film Chip 10K0 1% 0.2W TC50	147039
R 602	Metal Film Chip 1K00 1% 0.2W TC50	147040
R 603	Metal Film Chip 46E4 1% 0.2W TC50	147016
R 604	Metal Film Chip 46E4 1% 0.2W TC50	147016
R 605	Metal Film Chip 1K00 1% 0.2W TC50	147040

R 606	Metal Film 4k99 0.1% 0.25W TC15	140981
R 607	Metal Film Chip 46E4 1% 0.2W TC50	147016
R 608	Metal Film 10K0 0.1% 0.25W TC15	141010
R 609	Metal Film 10K0 0.1% 0.25W TC15	141010
R 610	Metal Film Chip 2K15 1% 0.2W TC50	147051
R 611	Metal Film 4k99 0.1% 0.25W TC15	140981
R 612	Metal Film Chip 100E 1% 0.250W TC50	147014
R 613	Metal Film Chip 100K 1% 0.2W TC50	147062
R 614	Metal Film Chip 1K00 1% 0.2W TC50	147040
R 617	Metal Film Chip 1K00 1% 0.2W TC50	147040
R 618	Metal Film 4k99 0.1% 0.25W TC15	140981
R 619	Metal Film Chip 2K15 1% 0.2W TC50	147051
R 620	Metal Film Chip 46E4 1% 0.2W TC50	147016
R 621	Cermet Trimpot 10K 20% 0.5W TC70	182301
R 622	Metal Film Chip 316K 1% 0.2W TC50	147116
R 623	Metal Film 10K0 0.1% 0.25W TC15	141010
R 624	Metal Film Chip 46E4 1% 0.2W TC50	147016
R 625	Metal Film 10K0 0.1% 0.25W TC15	141010
R 626	Metal Film 11K0 0.1% 0.25W TC15	141325
R 627	Metal Film Chip 261K 1% 0.2W TC50	147120
R 628	Metal Film 24K3 0.1% 0.25W TC15	141366
R 629	Metal Film 49K9 0.1% 0.25W TC15	141138
R 630	Metal Film Chip 464E 1% 0.2W TC50	147035
R 631	Metal Film Chip 316K 1% 0.2W TC50	147116
R 632	Metal Film Chip 46E4 1% 0.2W TC50	147016
R 633	Metal Film 13K7 0.1% 0.25W TC15	141337
R 634	Metal Film Chip 1K00 1% 0.2W TC50	147040
R 635	Cermet Trimpot 10K 20% 0.5W TC70	182301
R 636	Metal Film 20K5 0.1% 0.25W TC15	141364
R 637	Metal Film Chip 316K 1% 0.2W TC50	147116
R 638	Metal Film Chip 46E4 1% 0.2W TC50	147016
R 639	Metal Film 75K0 0.1% 0.25W TC15	141300
R 640	Metal Film 11K0 0.1% 0.25W TC15	141325
R 641	Metal Film Chip 261K 1% 0.2W TC50	147120
R 642	Metal Film Chip 464E 1% 0.2W TC50	147035
R 643	Metal Film Chip 464E 1% 0.2W TC50	147035
R 644	Metal Film Chip 46E4 1% 0.2W TC50	147016
R 645	Metal Film Chip 46E4 1% 0.2W TC50	147016
R 646	Cermet Trimpot 10K 20% 0.5W TC70	182301
R 647	Metal Film Chip 1K00 1% 0.2W TC50	147040
R 648	Metal Film Chip 100E 1% 0.250W TC50	147014
R 649	Metal Film Chip 1K00 1% 0.2W TC50	147040
R 650	Metal Film Chip 100E 1% 0.250W TC50	147014
R 651	Metal Film 24K3 0.1% 0.25W TC15	141366
R 652	Metal Film 49K9 0.1% 0.25W TC15	141138
R 653	Metal Film Chip 464E 1% 0.2W TC50	147035
R 654	Metal Film Chip 464E 1% 0.2W TC50	147035
R 655	Metal Film Chip 316K 1% 0.2W TC50	147116
R 656	Metal Film 13K7 0.1% 0.25W TC15	141337
R 657	Metal Film Chip 46E4 1% 0.2W TC50	147016
R 658	Cermet Trimpot 10K 20% 0.5W TC70	182301
R 659	Metal Film Chip 1K00 1% 0.2W TC50	147040
R 660	Metal Film 75K0 0.1% 0.25W TC15	141300
R 661	Metal Film Chip 464E 1% 0.2W TC50	147035

R 662	Metal Film Chip 147E 1% 0.2W TC50	147033
R 663	Metal Film Chip 147E 1% 0.2W TC50	147033
R 901	Metal Film Chip 21K5 1% 0.2W TC50	147066
R 902	Metal Film Chip 21K5 1% 0.2W TC50	147066
R 903	Metal Film Chip 21K5 1% 0.2W TC50	147066
R 904	Metal Film Chip 10K0 1% 0.2W TC50	147039
R 905	Metal Film Chip 6K81 1% 0.2W TC50	147090
R 906	Metal Film Chip 6K81 1% 0.2W TC50	147090
R 907	Metal Film Chip 6K81 1% 0.2W TC50	147090
R 908	Cermet Trimpot 1K 10% 0.5W TC70	182310
R 909	Metal Film 10K0 0.1% 0.25W TC15	141010

TESTPOINTS

TP 200	Pin header 50 pol straight l:6.7mm with lock	806072
TP 201	Pin header 50 pol straight l:6.7mm with lock	806072
TP 202	Pin header 50 pol straight l:6.7mm with lock	806072
TP 300	Pin header 50 pol straight l:6.7mm with lock	806072
TP 301	Pin header 50 pol straight l:6.7mm with lock	806072
TP 401	Pin header 3 pol straight l:6.7mm with lock	805894
TP 402	Pin header 3 pol straight l:6.7mm with lock	805894
TP 901	Pin header 3 pol straight l:6.7mm with lock	805894

CABLES

W 200	Coaxialcable 75E BNC/AMP 1M	618080
W 300	Coax Cabel With 1 pcs SMB-Conn 50E 140mm	617906
W 601	Coax Cabel With 1 pcs SMB-Conn 50E 140mm	617906

MISCELLANEOUS

	Screw Pozidrive panhead M2.5x8	008208
	Screw Pozidrive panhead M3x8	008308
	Screw Pozidrive Countersunk M2,5x20	009220
	Nut Rectangular M3 for to220	035909
	Tubular Rivet 2.5X10	060310
	Bushing ø8/2,8x13	066155
	Mounting Acc. for TO-220	816163
	Insulation Bushing F. TO-220	816214
	Isolating Plate F.Crystal	816287
	L-piece for PCB	857041
	Cover Plate RE125	933246
	PCB For RE125 Ref/Mot Board	971490
	Labels For PCB With 72 Pcs Each Of Ark 48x7	980722
GND901	Solder Terminal 0.1 O2	823303
GND902	Solder Terminal 0.1 O2	823303
QDS902	Socket DIL 24 pol, h:4.95 300mil	816274
X 200	Quartz Crystal 10Mhz Series 10ppm	910199
X 300	Quartz Crystal 10MHz Parallel 5ppm	910213

12. FM MODULATOR

12.1 Circuit Description

Fig. 12.1 shows the block diagram of the FM Modulator.

The FM Modulator produces an output signal, which can be CW, FM modulated or swept. The output frequency range is 70 to 250 MHz, which is always 20 MHz below the input signal from Synthesizer 2.

The FM Modulator contains two phase-locked loops:

1. The FM loop produces a signal that can be FM modulated or swept. The mean frequency (over time) is always 20 MHz.

2. The Output loop where the 20 MHz signal (with FM or SWEEP) is subtracted from the input signal from Synthesizer 2.

In this way, the FM or sweep signal is translated to the output loop.

In CW or AM mode, the 20 MHz signal (which in FM mode is obtained from the FM loop), is replaced by a 20 MHz signal generated in the Frequency Converter to keep phase noise low.

An acquisition circuit ensures proper lock of the output loop.

The FM Modulator contains a circuit for proper attenuation of modulation and sweep signals, as well as a circuit for pre-distortion of FM modulation (which compensates for distortion in the FM modulator). See sheet 1 of the schematic diagram. The pre-distortion circuit uses the non-linearity of a field effect transistor.

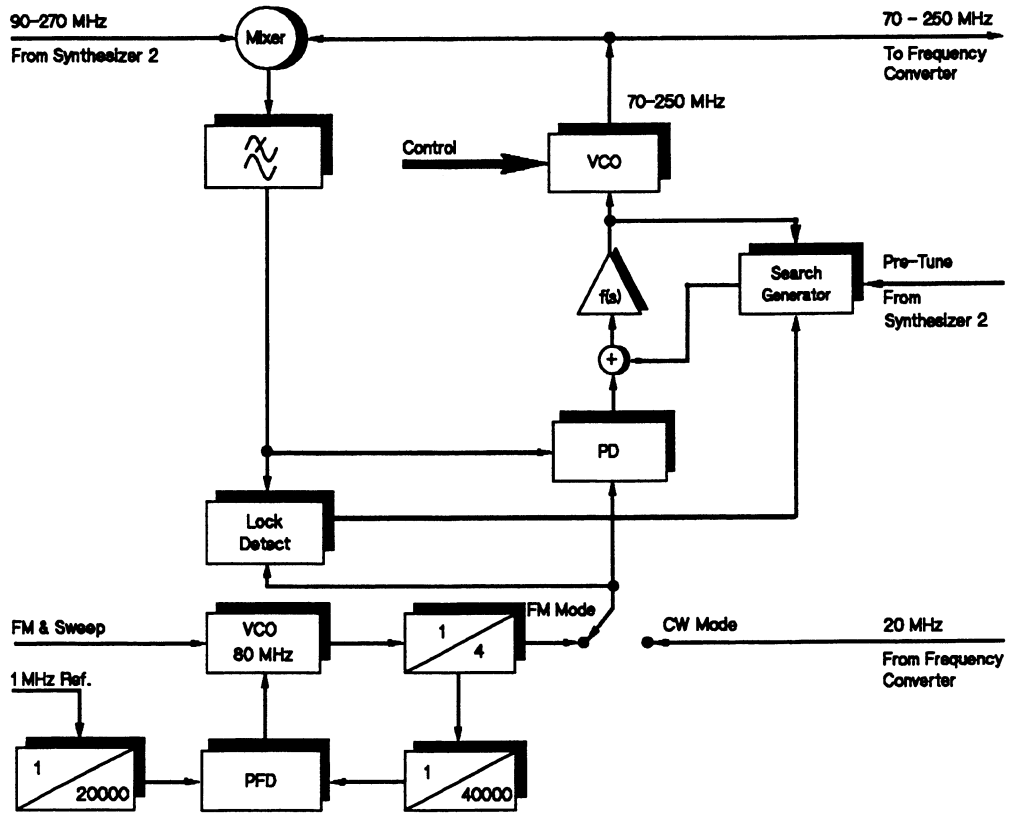

Fig. 12.1 - Block Diagram of FM Modulator

12.1.1 FM Modulation Loop

The FM modulation loop consists of:

A Voltage-Controlled Oscillator, VCO 1, oscillating on a mean frequency of 80 MHz, which can be FM modulated, PM modulated, or SWEPT. See sheet 1 of the schematic diagram.

A frequency divider (:4) which produces a 20 MHz FM output signal.

A phase-frequency detector and low-pass filter. Refer to sheet 2 of the schematic diagram. In order not to affect the FM modulation or sweep, the loop bandwidth is made very low (approximately 0.2 Hz). After further division by 40000 a 500 Hz signal is obtained and fed to the PFD.

A 1 MHz signal from the Reference Oscillator is divided by 2000 producing a 500 Hz signal, which is fed as reference signal to the PFD.

12.1.2 Output Loop

The output loop consists of:

A Voltage-Controlled Oscillator, VCO 2, covering the frequency range 70 to 250 MHz. Refer to sheet 3 of the schematic diagram.

A Mixer, where the signal from VCO 2 is mixed with the input from Synthesizer 2. After low-pass filtering, the difference frequency Fsynthesizer 2 - Fvco 2 is fed to phase detector and to a lock detector. The second input to the phase detector is the 20 MHz FM or CW signal.

The phase detector is a multiplier type. To ensure fast lock, the frequencies of the two input signals must not be too different. The output from the phase detector is via an integrator and a low-pass filter fed to the tuning diodes of the VCO 2.

A Lock Detector detects whether or not the output loop is properly locked. If the loop is not locked, a search generator sweeps the frequency of the output loop (VCO 2) until lock is achieved. See sheet 4 of the schematic diagram.

If the input signal from Synthesizer 2 is interrupted, the search generator starts sweeping the output frequency signal.

The search generator can be inhibited by placing a jumper at TP401 (for example while troubleshooting).

The lock detector is an analog multiplier that has the same inputs as the phase detector, except that the phase of one of the inputs is shifted 90 °.

The VCO 2 covers the frequency range 70 to 250 MHz. Refer to sheet 3 of the schematic diagram. Because of the relative wide frequency range of the VCO 2, tank coils are switched in parallel, depending of the actual frequency setting. Low-loss RF switching diodes are used for this purpose.

A non-linear network, which compensates for the non-linear tuning characteristics of the VCO 2, keeps loop gain of the phase-locked loop nearly constant over the frequency range. Furthermore, the time constants of the loop-integrator are varied synchronously with coil switching.

To ensure that the output frequency is 20 MHz below (and not 20 MHz above) the frequency from Synthesizer 2, a "Pre-tuning voltage" obtained from the tuning voltage of Synthesizer 2 is fed to the FM Modulator. If the "Pre-tuning voltage" is lower than the tuning voltage of the VCO 2 on the FM Modulator it indicates that the frequency of VCO 2 is too high. The acquisition circuit then starts sweeping of the VCO 2, until correct lock occurs.

12.2 Adjustments

For the test procedure see section 4.10.4 and 4.11.

The following adjustments are described:

1. FM stereo separation.
2. FM distortion.
3. FM deviation.

All the adjustments have to be made strictly in the order stated.

Frequency setting of RE 125: 100 MHz.

1. Adjust L/R stereo separation using potentiometer R112.

2. Adjust FM distortion using potentiometer R121.

3. Adjust FM deviation using potentiometer R100.

You can access the potentiometers R112, R121 and R100 from the top of the instrument. See section 4.3, **Special Adjustment Points**.

N O T E If the stereo separation or the FM distortion has been adjusted, you must readjust the FM deviation.

12.3 Schematic Diagram

The schematic diagram for the FM Modulator is located in the following. The diagram number is 985-301, and the diagram number for the prescaler is 985-672.

12.4 Component Locations

The component locations on the FM Modulator are shown in the following.

12.5 Parts List

A copy of the parts list from production documentation is located in the following. The code number of the assembled PCB is 901-857, and the code number of the prescaler is 902-324.

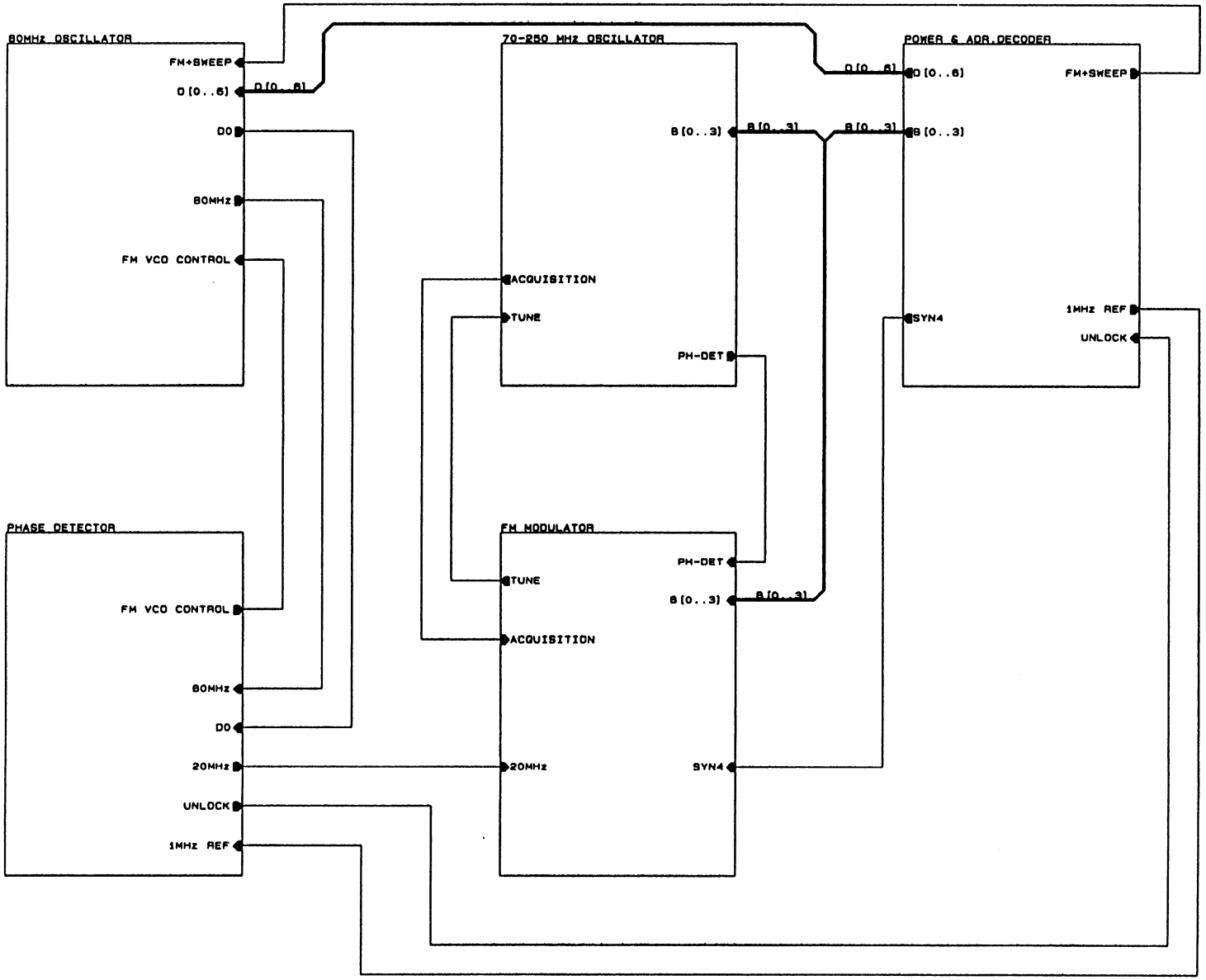

RE TECHNOLOGY AS

RE122 SIGNAL GENERATOR

FM MODULATOR

Title	ROOT SHEET	
Size A	Document Number 901-857 971-403 985-301	REV 7a
Date: December 2, 1993	Sheet 1 of 6	

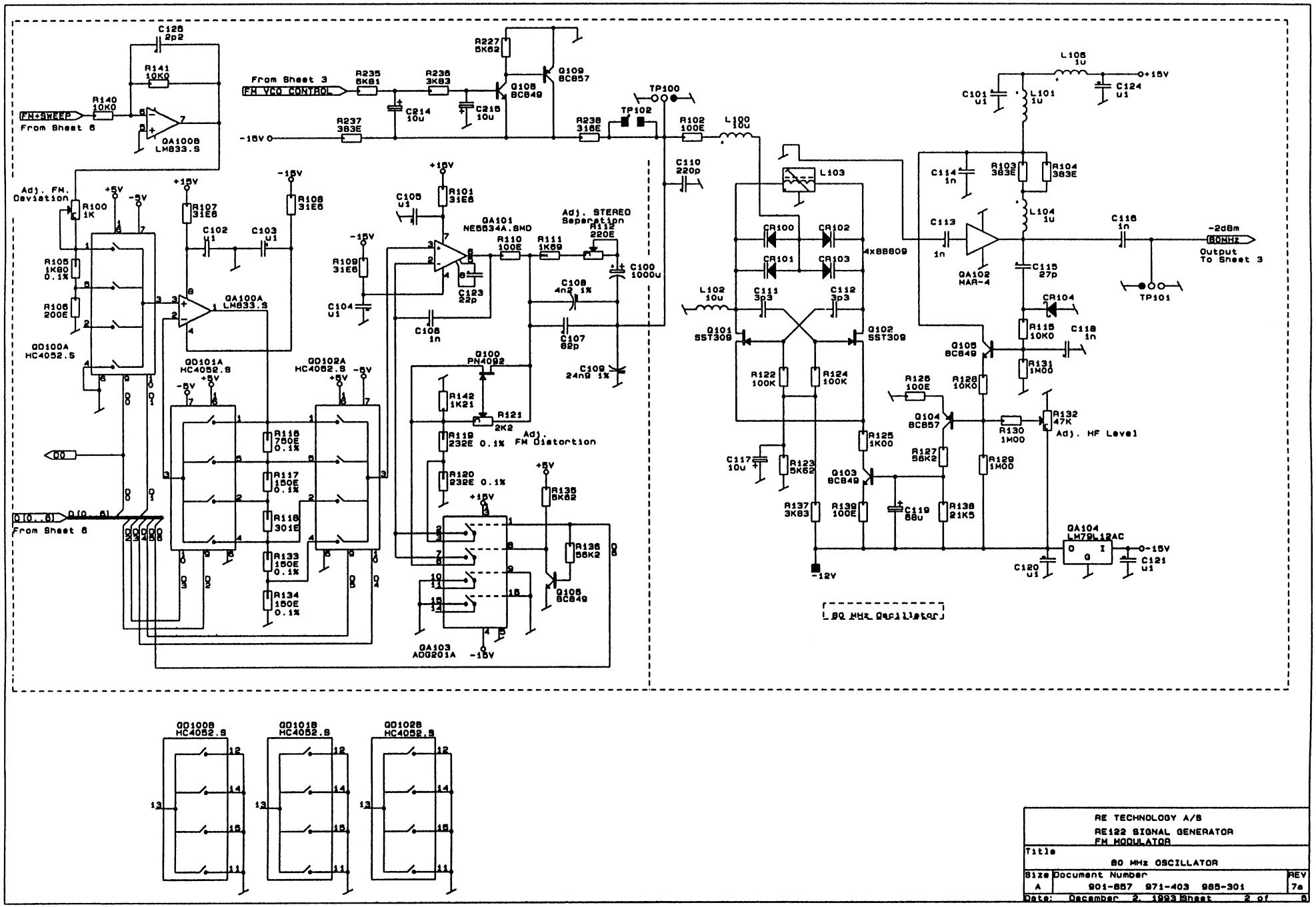
FM+SWEEP
From Sheet 6
From Sheet 3
FM VCO CONTROL
Adj. FM. Deviation
Adj. STEREO Separation
Adj. FM Distortion
Adj. HF Level
Output To Sheet 3
80MHz
-2dBm
80 MHz Oscillator
RE TECHNOLOGY A/S
RE122 SIGNAL GENERATOR
FM MODULATOR
Title
80 MHz OSCILLATOR
Size
A
Document Number
901-857 971-403 985-301
REV
7a
Date: December 2, 1993 Sheet 2 of 6

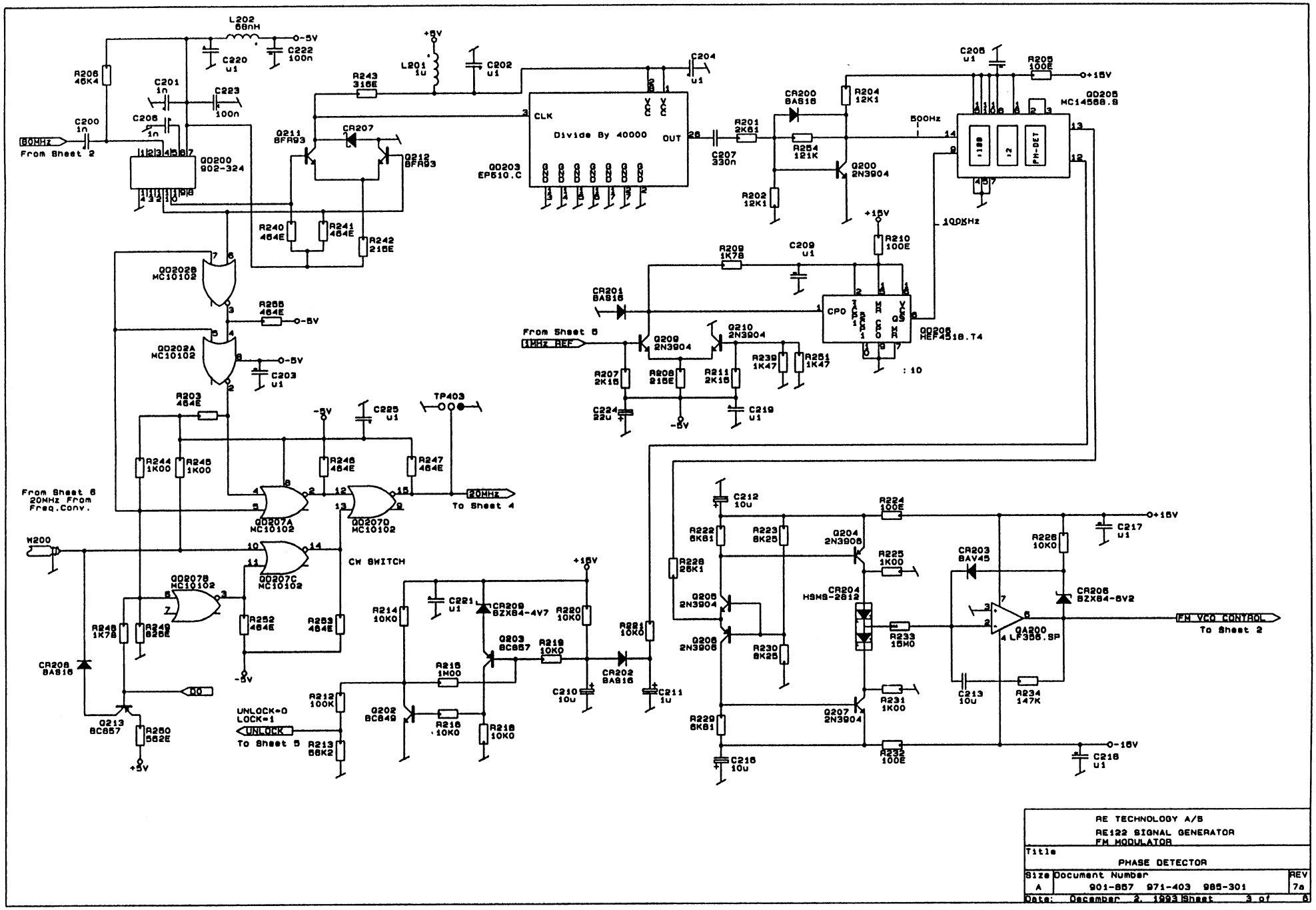

RE TECHNOLOGY A/S RE122 SIGNAL GENERATOR FM MODULATOR		
Title PHASE DETECTOR		
Size A	Document Number 901-857 971-403 985-301	REV 7a
Date: December 2, 1993	Sheet 3 of 6	

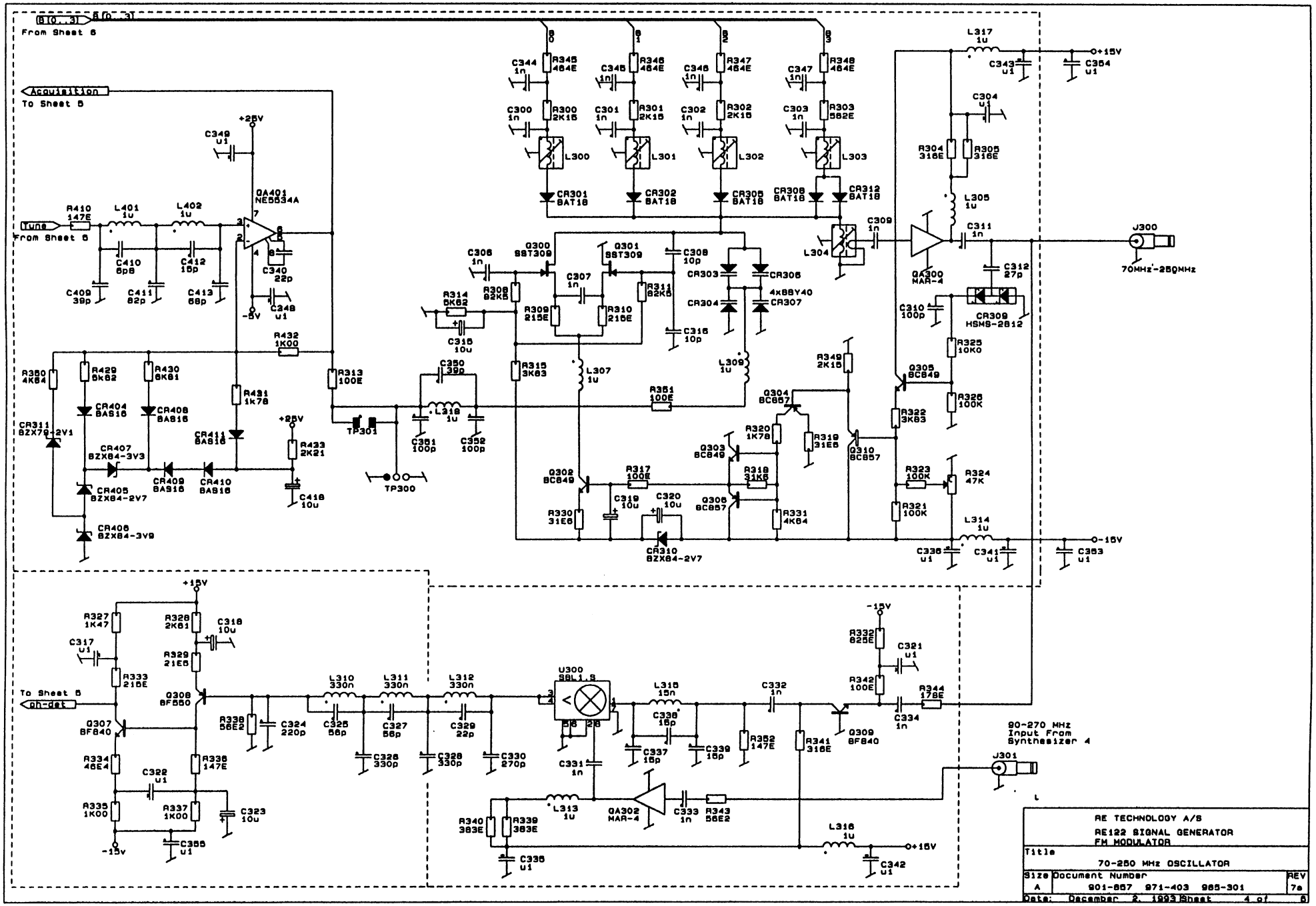
B[0..3]
From Sheet 6
Acquisition
To Sheet 5
Tune
From Sheet 5
+25V
-5V
OA401
NE5534A
R410 147E
L401 1u
L402 1u
C410 6p8
C412 15p
C409 39p
C411 82p
C413 68p
C340 22p
C348 u1
C349 u1
R432 1K00
R313 100E
R350 4K64
R429 6K82
R430 6K81
R431 1K78
R433 2K21
C418 10u
CR311 BZX79-2V1
CR404 BAS16
CR408 BAS16
CR411 BAS16
CR407 BZX84-3V3
CR409 BAS16
CR410 BAS16
CR405 BZX84-2V7
CR406 BZX84-3V9
TP301
TP300
C350 39p
L318 1u
C351 100p
C352 100p
R345 464E
R346 464E
R347 464E
R348 464E
C344 1n
C345 1n
C346 1n
C347 1n
C300 1n
C301 1n
C302 1n
C303 1n
R300 2K15
R301 2K15
R302 2K15
R303 562E
L300
L301
L302
L303
CR301 BAT18
CR302 BAT18
CR305 BAT18
CR308 BAT18
CR312 BAT18
C306 1n
Q300 SST309
Q301 SST309
C307 1n
C308 10p
R314 5K62
C315 10u
R308 82K5
R309 215E
R311 82K5
R310 215E
C316 10p
CR303
CR306
CR304
CR307
4xBBY40
R315 3K63
L307 1u
L309 1u
R351 100E
Q304 BC857
R320 1K78
R319 31E6
Q303 BC849
R318 31K6
Q302 BC849
R317 100E
C319 10u
C320 10u
Q305 BC857
R330 31E6
R331 4K64
CR310 BZX84-2V7
R349 2K15
Q310 BC857
L304
C309 1n
L317 1u
C343 u1
+15V
C354 u1
C304 u1
R304 316E
R305 316E
L305 1u
C311 1n
Q300 MAR-4
C312 27p
J300
70MHz-250MHz
C310 100p
CR309 HSMS-2812
R325 10K0
Q305 BC849
R326 100K
R322 3K83
R323 100K
R324 47K
R321 100K
L314 1u
C336 u1
C341 u1
-15V
C353 u1
R327 1K47
R328 2K61
C318 10u
C317 u1
R329 21E6
R333 215E
To Sheet 5
ph-det
Q308 BF550
Q307 BF840
R334 46E4
R336 147E
C322 u1
R335 1K00
R337 1K00
C323 10u
C355 u1
R338 56E2
C324 220p
L310 330n
L311 330n
L312 330n
C325 56p
C327 56p
C326 330p
C328 330p
C329 22p
C330 270p
U300 SBL1.S
C331 1n
L315 15n
C338 15p
C337 15p
C339 15p
C332 1n
R352 147E
R341 316E
R332 825E
C321 u1
R342 100E
R344 178E
C334 1n
Q309 BF840
90-270 MHz
Input From
Synthesizer 4
J301
L313 1u
OA302 MAR-4
C333 1n
R343 56E2
R340 383E
R339 383E
C335 u1
L316 1u
C342 u1
RE TECHNOLOGY A/S
RE122 SIGNAL GENERATOR
FM MODULATOR
Title
70-250 MHz OSCILLATOR
Size
A
Document Number
901-857 971-403 985-301
REV
7a
Date: December 2, 1993
Sheet 4 of 6

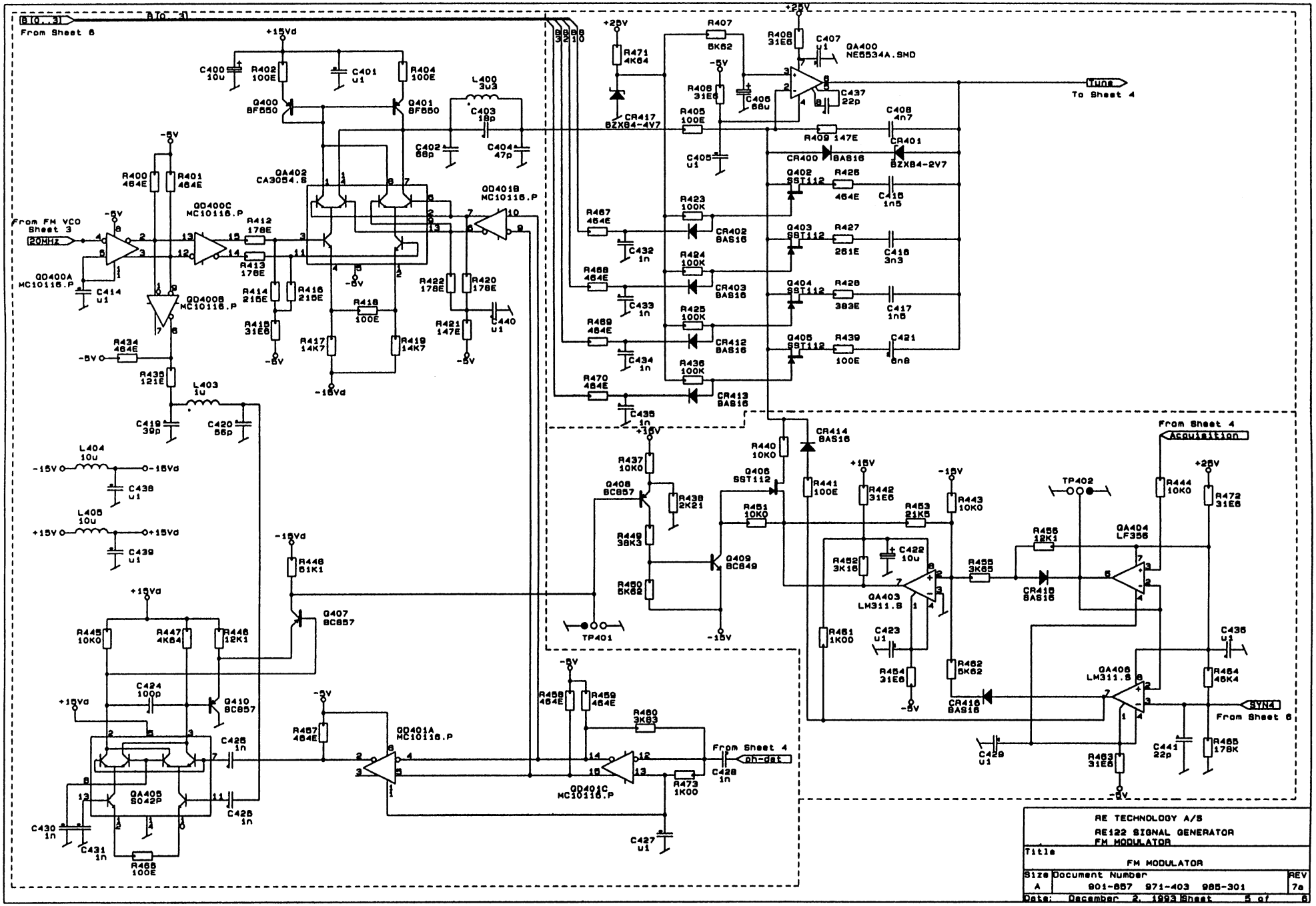
B[0..3]
From Sheet 6
From FM VCO Sheet 3
20MHz
Tune
To Sheet 4
From Sheet 4
Acquisition
SYN4
From Sheet 6
on-det
TP401
TP402
RE TECHNOLOGY A/S
RE122 SIGNAL GENERATOR
FM MODULATOR
Title
FM MODULATOR
Size
A
Document Number
901-857 971-403 985-301
REV
7a
Date: December 2, 1993
Sheet 5 of 6

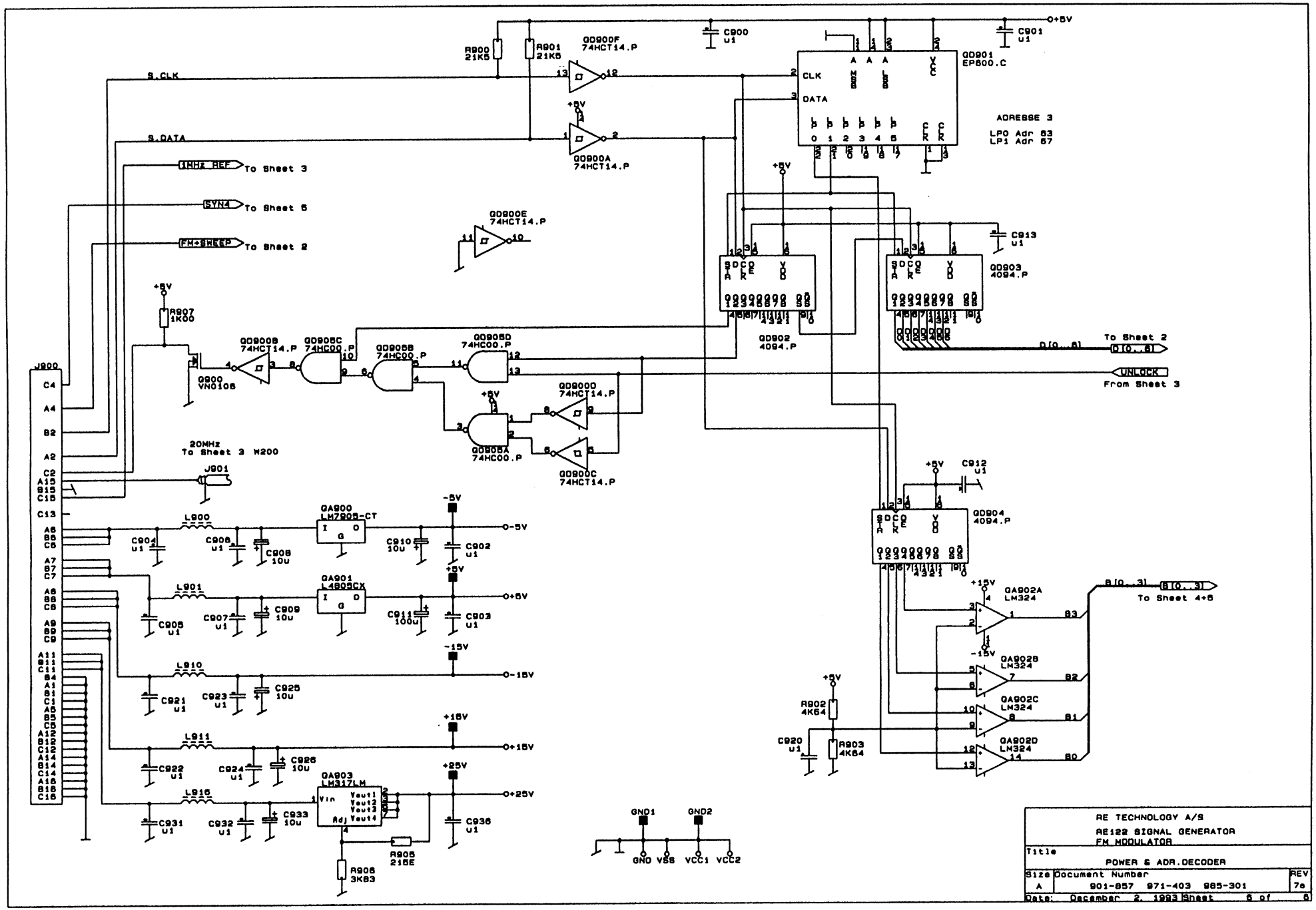

RE TECHNOLOGY A/S

RE122 SIGNAL GENERATOR

FM MODULATOR

Title: POWER & ADR.DECODER

Size	Document Number	REV
A	901-857 971-403 985-301	7a

Date: December 2, 1993 Sheet 6 of 6

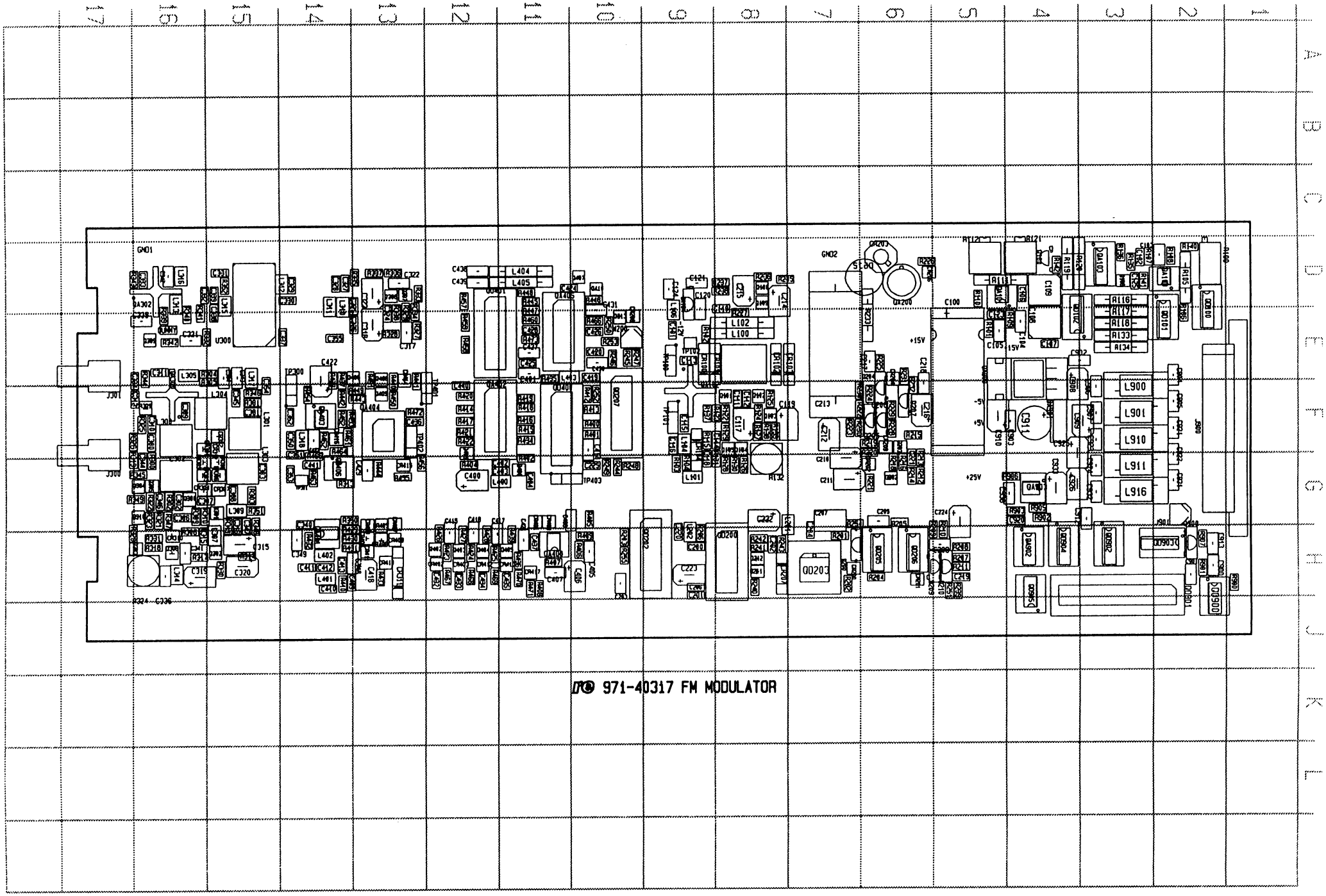

971-40317 FM MODULATOR

COMP	LOC	COMP	LOC	COMP	LOC	COMP	LOC	COMP	LOC	COMP	LOC	COMP	LOC	COMP	LOC	COMP	LOC	COMP	LOC	COMP	LOC	COMP	LOC
+5V	F5	C200	H9	C353	G14	J900	F2	Q102	F8	R135	D3	R317	H15	R441	E13								
+15V	E6	C201	H9	C354	E15	J901	G2	Q103	F8	R136	D3	R318	H16	R442	F14								
+25V	G5	C202	H8	C355	E14	L100	E8	Q104	F8	R137	F9	R319	F17	R443	F13								
-5V	F5	C203	H10	C400	G12	L101	G9	Q105	F8	R138	F8	R320	H16	R444	G13								
-12V	E9	C204	H7	C401	E11	L102	E8	Q106	D3	R139	F8	R321	G16	R445	D11								
-15V	E5	C205	G6	C402	G12	L104	F9	Q108	D8	R140	D2	R322	G16	R446	D10								
CR100	E9	C206	H9	C403	G12	L106	E9	Q109	D8	R141	D3	R323	G16	R447	E11								
CR101	E8	C207	G7	C404	G11	L201	G8	Q200	H7	R142	D4	R324	J17	R448	D11								
CR102	E8	C209	H5	C405	H10	L202	G9	Q202	G6	R201	H7	R325	F16	R449	F14								
CR103	E8	C210	G7	C406	H10	L300	F16	Q203	F6	R202	H7	R326	F17	R450	F13								
CR104	F9	C211	G7	C407	H11	L301	F15	Q204	E6	R203	H10	R327	E13	R451	F13								
CR200	H7	C212	F7	C408	G11	L302	F16	Q205	F6	R204	H6	R328	E13	R452	F14								
CR201	H6	C213	F7	C409	H14	L303	G15	Q206	F6	R205	G6	R329	E13	R453	F13								
CR202	G6	C214	D8	C410	H14	L304	F15	Q207	F6	R206	G9	R330	H15	R454	F14								
CR203	D6	C215	D8	C411	H14	L305	E16	Q209	H5	R207	H5	R331	H16	R455	G13								
CR204	E6	C216	F6	C412	H14	L307	G15	Q210	H5	R208	H5	R332	E15	R456	F13								
CR206	D6	C217	E6	C413	H14	L309	G15	Q211	H8	R209	G6	R333	D13	R457	D12								
CR207	H8	C218	E6	C414	F10	L310	D14	Q212	H8	R210	G5	R334	D13	R458	E12								
CR208	E10	C219	H5	C415	G12	L311	E14	Q213	E10	R211	H5	R335	D13	R459	E12								
CR209	F6	C220	H9	C416	G12	L312	D15	Q300	G16	R212	G6	R336	D13	R460	E11								
CR301	F15	C221	G6	C417	G11	L313	D16	Q301	G15	R213	G6	R337	D13	R461	F14								
CR302	F15	C222	G8	C418	H13	L314	H16	Q302	H15	R214	G6	R338	D13	R462	F14								
CR303	G15	C223	H9	C419	E10	L315	D15	Q303	H16	R215	F6	R339	D16	R463	G14								
CR304	G15	C224	G5	C420	E10	L316	D16	Q304	G17	R216	G6	R340	D16	R464	F14								
CR305	G16	C225	G10	C421	H11	L317	F15	Q305	G16	R218	G6	R341	D16	R465	F14								
CR306	G15	C300	F16	C422	E14	L318	F14	Q306	H16	R219	F6	R342	E16	R466	E10								
CR307	G15	C301	F15	C423	F14	L400	G12	Q307	D13	R220	F6	R343	D17	R467	H12								
CR308	F15	C302	G16	C424	D11	L401	H14	Q308	D13	R221	G6	R344	E16	R468	H12								
CR309	F16	C303	G15	C425	E11	L402	H14	Q309	E16	R222	F6	R345	G17	R469	H12								
CR310	H16	C304	E15	C426	E10	L403	E11	Q310	G17	R223	F7	R346	F15	R470	H11								
CR311	H13	C306	G16	C427	E11	L404	D11	Q400	G11	R224	F6	R347	G16	R471	H11								
CR312	F15	C307	G16	C428	E11	L405	D11	Q401	G12	R225	E6	R348	H15	R472	F13								
CR400	G11	C308	G15	C429	G13	L900	F3	Q402	H12	R226	D5	R349	G16	R473	E11								
CR401	H11	C309	F16	C430	E10	L901	F3	Q403	H12	R227	E8	R350	G14	R900	H1								
CR402	H12	C310	F16	C431	D10	L910	F3	Q404	H12	R228	F6	R351	G15	R901	H2								
CR403	H12	C311	E16	C432	H12	L911	G3	Q405	H11	R229	F6	R352	D15	R902	G4								
CR404	H13	C312	F17	C433	H12	L916	G3	Q406	E13	R230	F6	R400	F10	R903	G4								
CR405	G13	C315	H15	C434	H12	QA100	D2	Q407	D10	R231	E6	R401	F10	R905	G4								
CR406	H13	C316	G15	C435	H11	QA101	D5	Q408	E14	R232	E6	R402	F11	R906	G5								
CR407	H13	C317	E13	C436	F13	QA102	F8	Q409	F13	R233	E6	R404	G12	R907	H2								
CR408	H13	C318	E13	C437	H11	QA103	D3	Q410	D10	R234	F6	R405	G10	TP100	E9								
CR409	H13	C319	H16	C438	D12	QA104	D9	Q900	H2	R235	D7	R406	H10	TP101	F9								
CR410	H13	C320	H15	C439	D12	QA200	D6	R100	D1	R236	D8	R407	H11	TP102	E9								
CR411	H13	C321	E16	C440	F12	QA300	F16	R101	E5	R237	D9	R408	H11	TP300	E14								
CR412	H12	C322	D13	C441	G14	QA302	D17	R102	E9	R238	D8	R409	H10	TP301	G14								
CR413	H11	C323	D13	C900	H2	QA400	H11	R103	G9	R239	H5	R410	H14	TP401	F12								
CR414	F13	C324	D13	C901	H2	QA401	H14	R104	G9	R240	H8	R412	F10	TP402	F13								
CR415	G13	C325	D14	C902	E4	QA402	E11	R105	D2	R241	H8	R413	F10	TP403	G10								
CR416	F14	C326	E14	C903	F4	QA403	F14	R106	D2	R242	H8	R414	F12	U300	E15								
CR417	H11	C327	D14	C904	F2	QA404	F13	R107	D3	R243	H8	R415	F11	W200	E10								
C100	D5	C328	D14	C905	F2	QA405	D10	R108	D2	R244	G10	R416	F11	stao	D7								
C101	E9	C329	D14	C906	F3	QA406	G14	R109	E4	R245	E10	R417	F12										
C102	D3	C330	D14	C907	F3	QA900	F5	R110	D5	R246	E10	R418	F11										
C103	D3	C331	D15	C908	E4	QA901	F4	R111	D4	R247	E10	R419	F11										
C104	E4	C332	D16	C909	F3	QA902	H4	R112	C5	R248	G10	R420	F12										
C105	E5	C333	D16	C910	F5	QA903	G4	R115	F9	R249	G10	R421	F12										
C106	D4	C334	E17	C911	F4	QD100	D2	R116	D3	R250	E10	R422	F12										
C107	E4	C335	D16	C912	G3	QD101	E2	R117	E3	R251	H5	R423	H12										
C108	D4	C336	H16	C913	H2	QD102	E4	R118	E3	R252	F10	R424	H12										
C109	D4	C337	E14	C920	G4	QD200	H8	R119	D4	R253	E10	R425	H12										
C110	E9	C338	E15	C921	F2	QD202	H9	R120	D4	R254	G7	R426	H12										
C111	F8	C339	D15	C922	G2	QD203	H7	R121	C4	R255	H10	R427	H12										
C112	F8	C340	G14	C923	F3	QD205	H6	R122	F8	R300	G16	R428	H12										
C113	E9	C341	H16	C924	G3	QD206	H6	R123	F8	R301	F15	R429	H14										
C114	F8	C342	D16	C925	F4	QD207	F10	R124	F8	R302	G16	R430	H14										
C115	F9	C343	E15	C926	G4	QD400	F10	R125	F8	R303	G15	R431	H14										
C116	F9	C344	F16	C931	G2	QD401	D11	R126	G8	R304	E15	R432	H14										
C117	F8	C345	F15	C932	G3	QD900	H2	R127	F8	R305	E15	R433	H13										
C118	F9	C346	G16	C933	G4	QD901	H2	R128	G8	R308	H16	R434	F11										
C119	F8	C347	H15	C936	G5	QD902	H3	R129	F8	R309	G16	R435	E11										
C120	D9	C348	H13	DUMMY	E16	QD903	H2	R130	G8	R310	G16	R436	H11										
C121	D9	C349	H14	GND1	D16	QD904	H4	R131	F9	R311	G15	R437	F14										
C123	E5	C350	F14	GND2	D7	QD905	J4	R132	G8	R313	G14	R438	E14										
C124	D9	C351	F14	J300	G17	Q100	D4	R133	E3	R314	H15	R439	H11										
C125	D3	C352	F14	J301	F17	Q101	F8	R134	E3	R315	G16	R440	F13										

COMPONENT SIDE

971-40317

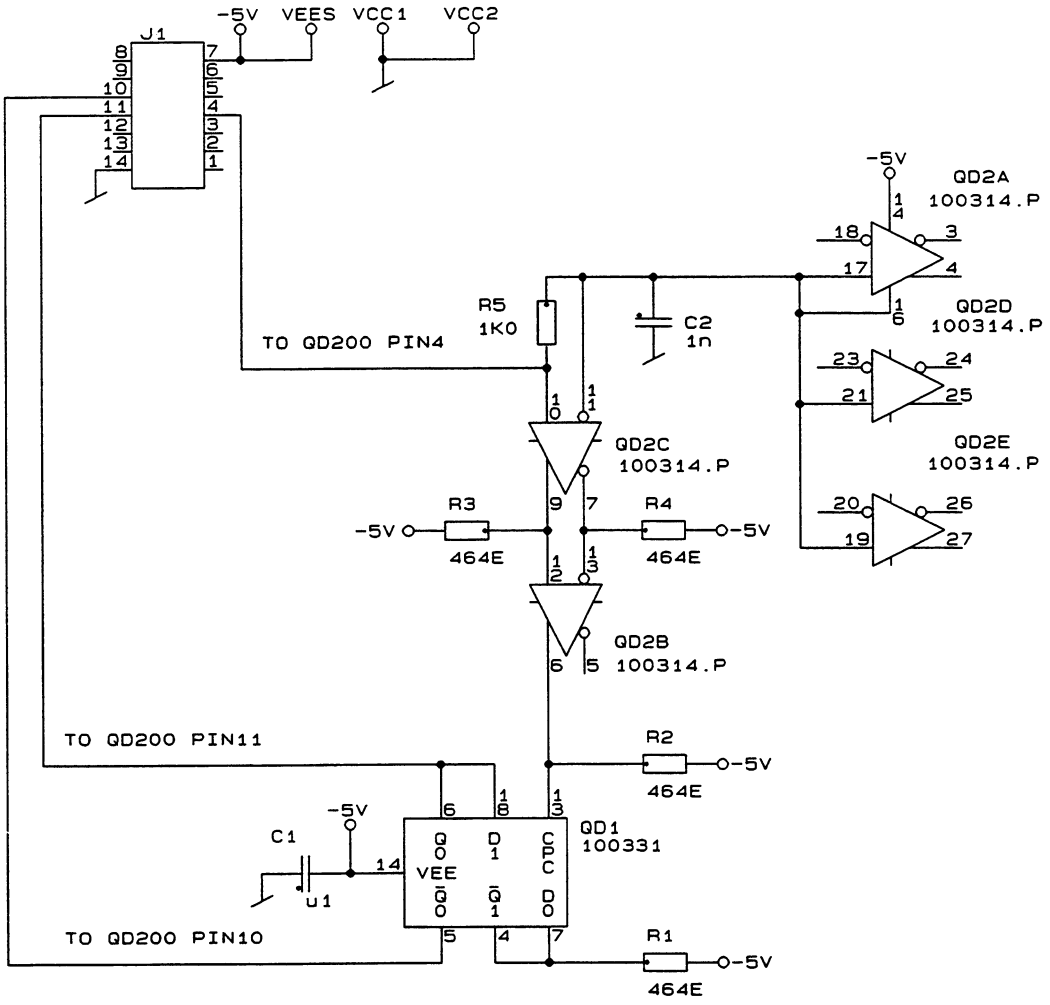

RE TECHNOLOGY A/S

RE125 SIGNAL GENERATOR
FM MODULATOR

Title		
PIGGY BACK FOR PRE-SCALER		
Size	Document Number	REV
A	902-324 971-754 985-672	1a
Date: October 28, 1993	Sheet 1 of 1	

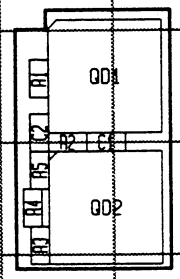

ITO971-75411 PIGGY BACK.

COMP	LOC	COMP	LOC	COMP	LOC	COMP	LOC	COMP	LOC	COMP	LOC	COMP	LOC	COMP	LOC	COMP	LOC	COMP	LOC	COMP	LOC	COMP	LOC
C1	F9																						
C2	F9																						
QD1	F9																						
QD2	F10																						
R1	F9																						
R2	F9																						
R3	F10																						
R4	F10																						
R5	F10																						

COMPONENT SIDE

FM Modulator (901857)

CAPACITORS

C 100	Electrolytic 1000/16, 2000h/85°, A:10*25, RM12	260044
C 101	Ceramic Chip X7R 100n 20% 50V, size 1206	217006
C 102	Ceramic Chip X7R 100n 20% 50V, size 1206	217006
C 103	C Ceramic 100n 20% 50V	213401
C 104	C Ceramic 100n 20% 50V	213401
C 105	C Ceramic 100n 20% 50V	213401
C 106	Ceramic Chip NP0 1n 5% 63V, size 1206	217005
C 107	Ceramic Chip NP0 82p 5% 63V, size 1206	217019
C 108	C Polystyrene 4n2 1% 63V	243338
C 109	C Polystyrene 24n9 1% 63V	243336
C 110	Ceramic Chip NP0 220p 5% 63V, size 1206	217025
C 111	Ceramic Chip NP0 3p3 p25 63V, size 1206	217001
C 112	Ceramic Chip NP0 3p3 p25 63V, size 1206	217001
C 113	Ceramic Chip NP0 1n 5% 63V, size 1206	217005
C 114	Ceramic Chip NP0 1n 5% 63V, size 1206	217005
C 115	Ceramic Chip NP0 27p 5% 63V, size 1206	217021
C 116	Ceramic Chip NP0 1n 5% 63V, size 1206	217005
C 117	C Solid Aluminium 10u 20% 16V Short Type	265108
C 118	Ceramic Chip NP0 1n 5% 63V, size 1206	217005
C 119	C Solid Aluminium 68u 20% 6v3 Short Type	265111
C 120	C Ceramic 100n 20% 50V	213401
C 121	C Ceramic 100n 20% 50V	213401
C 123	Ceramic Chip NP0 22p 5% 63V, size 1206	217003
C 124	C Ceramic 100n 20% 50V	213401
C 125	Ceramic Chip NP0 2p2 ±0p25 63V, size 1206	217015
C 200	Ceramic Chip NP0 1n 5% 63V, size 1206	217005
C 201	Ceramic Chip NP0 1n 5% 63V, size 1206	217005
C 202	Ceramic Chip X7R 100n 20% 50V, size 1206	217006
C 203	C Ceramic 100n 20% 50V	213401
C 204	Ceramic Chip X7R 100n 20% 50V, size 1206	217006
C 205	C Ceramic 100n 20% 50V	213401
C 206	Ceramic Chip NP0 1n 5% 63V, size 1206	217005
C 207	MKT, 0.33/63/10, R:3.5*8*7.2, RM2	241072
C 209	C Ceramic 100n 20% 50V	213401
C 210	C Solid Aluminium 10u 20% 16V Short Type	265108
C 211	C Solid Aluminium 1u0 20% 25V Short Type	265101
C 212	C Solid Aluminium 10u 20% 16V Short Type	265108
C 213	C Polycarbonate 10u 20% 63V	242003
C 214	C Solid Aluminium 10u 20% 16V Short Type	265108
C 215	C Solid Aluminium 10u 20% 16V Short Type	265108
C 216	C Solid Aluminium 10u 20% 16V Short Type	265108
C 217	C Ceramic 100n 20% 50V	213401
C 218	C Ceramic 100n 20% 50V	213401
C 219	Ceramic Chip X7R 100n 20% 50V, size 1206	217006
C 220	Ceramic Chip X7R 100n 20% 50V, size 1206	217006
C 221	Ceramic Chip X7R 100n 20% 50V, size 1206	217006
C 222	C Ceramic 100n 20% 50V	213401
C 223	C Ceramic 100n 20% 50V	213401
C 224	C Solid Aluminium 22u 20% 6v3 Short Type	265109
C 225	Ceramic Chip X7R 100n 20% 50V, size 1206	217006

C 226	Ceramic Chip X7R 100n 20% 50V, size 1206	217006
C 300	Ceramic Chip NP0 1n 5% 63V, size 1206	217005
C 301	Ceramic Chip NP0 1n 5% 63V, size 1206	217005
C 302	Ceramic Chip NP0 1n 5% 63V, size 1206	217005
C 303	Ceramic Chip NP0 1n 5% 63V, size 1206	217005
C 304	C Ceramic 100n 20% 50V	213401
C 306	Ceramic Chip NP0 1n 5% 63V, size 1206	217005
C 307	Ceramic Chip NP0 1n 5% 63V, size 1206	217005
C 308	Ceramic Chip NP0 10p 5% 63V, size 1206	217012
C 309	Ceramic Chip NP0 1n 5% 63V, size 1206	217005
C 310	Ceramic Chip NP0 100p 5% 63V, size 1206	217004
C 311	Ceramic Chip NP0 1n 5% 63V, size 1206	217005
C 312	Ceramic Chip NP0 27p 5% 63V, size 1206	217021
C 315	C Solid Aluminium 10u 20% 16V Short Type	265108
C 317	C Ceramic 100n 20% 50V	213401
C 318	C Solid Aluminium 10u 20% 16V Short Type	265108
C 319	C Solid Aluminium 10u 20% 16V Short Type	265108
C 320	C Solid Aluminium 10u 20% 16V Short Type	265108
C 321	C Ceramic 100n 20% 50V	213401
C 322	C Ceramic 100n 20% 50V	213401
C 323	C Solid Aluminium 10u 20% 16V Short Type	265108
C 324	Ceramic Chip NP0 220p 5% 63V, size 1206	217025
C 325	Ceramic Chip NP0 56p 5% 63V, size 1206	217030
C 326	Ceramic Chip NP0 330p 5% 63V, size 1206	217034
C 327	Ceramic Chip NP0 56p 5% 63V, size 1206	217030
C 328	Ceramic Chip NP0 330p 5% 63V, size 1206	217034
C 329	Ceramic Chip NP0 22p 5% 63V, size 1206	217003
C 330	Ceramic Chip NP0 220p 5% 63V, size 1206	217025
C 331	Ceramic Chip NP0 1n 5% 63V, size 1206	217005
C 332	Ceramic Chip NP0 1n 5% 63V, size 1206	217005
C 333	Ceramic Chip NP0 1n 5% 63V, size 1206	217005
C 334	Ceramic Chip NP0 1n 5% 63V, size 1206	217005
C 335	C Ceramic 100n 20% 50V	213401
C 336	C Ceramic 100n 20% 50V	213401
C 337	Ceramic Chip NP0 15p 5% 63V, size 1206	217002
C 338	Ceramic Chip NP0 15p 5% 63V, size 1206	217002
C 339	Ceramic Chip NP0 15p 5% 63V, size 1206	217002
C 340	Ceramic Chip NP0 22p 5% 63V, size 1206	217003
C 341	C Ceramic 100n 20% 50V	213401
C 342	C Ceramic 100n 20% 50V	213401
C 343	C Ceramic 100n 20% 50V	213401
C 344	Ceramic Chip NP0 1n 5% 63V, size 1206	217005
C 345	Ceramic Chip NP0 1n 5% 63V, size 1206	217005
C 346	Ceramic Chip NP0 1n 5% 63V, size 1206	217005
C 347	Ceramic Chip NP0 1n 5% 63V, size 1206	217005
C 348	C Ceramic 100n 20% 50V	213401
C 349	C Ceramic 100n 20% 50V	213401
C 350	Ceramic Chip NP0 39p 5% 63V, size 1206	217035
C 351	Ceramic Chip NP0 100p 5% 63V, size 1206	217004
C 352	Ceramic Chip NP0 100p 5% 63V, size 1206	217004
C 353	Ceramic Chip X7R 100n 20% 50V, size 1206	217006
C 354	Ceramic Chip X7R 100n 20% 50V, size 1206	217006
C 355	Ceramic Chip X7R 100n 20% 50V, size 1206	217006
C 400	C Solid Aluminium 10u 20% 16V Short Type	265108

C 401	C Ceramic 100n 20% 50V	213401
C 402	Ceramic Chip NP0 68p 5% 63V, size 1206	217026
C 403	Ceramic Chip NP0 18p0 10% 63V, size 1206	217040
C 404	Ceramic Chip NP0 56p 5% 63V, size 1206	217030
C 405	C Ceramic 100n 20% 50V	213401
C 406	C Solid Aluminium 68u 20% 6v3 Short Type	265111
C 407	C Ceramic 100n 20% 50V	213401
C 408	C Ceramic 4700p 63V 5%	213614
C 409	Ceramic Chip NP0 39p 5% 63V, size 1206	217035
C 410	Ceramic Chip NP0 10p 5% 63V, size 1206	217012
C 411	Ceramic Chip NP0 82p 5% 63V, size 1206	217019
C 412	Ceramic Chip NP0 15p 5% 63V, size 1206	217002
C 413	Ceramic Chip NP0 68p 5% 63V, size 1206	217026
C 414	C Ceramic 100n 20% 50V	213401
C 415	C Ceramic 1500p 5% 63V	213613
C 416	C Ceramic 3300p 63V 5%	213615
C 417	C Ceramic 1500p 5% 63V	213613
C 418	C Solid Aluminium 10u 20% 16V Short Type	265108
C 419	Ceramic Chip NP0 39p 5% 63V, size 1206	217035
C 420	Ceramic Chip NP0 56p 5% 63V, size 1206	217030
C 421	MKT 0.0068/63/10 R:2.5*7*4.6 RM1	241093
C 422	C Solid Aluminium 10u 20% 16V Short Type	265108
C 423	C Ceramic 100n 20% 50V	213401
C 424	Ceramic Chip NP0 100p 5% 63V, size 1206	217004
C 425	Ceramic Chip NP0 1n 5% 63V, size 1206	217005
C 426	Ceramic Chip NP0 1n 5% 63V, size 1206	217005
C 427	C Ceramic 100n 20% 50V	213401
C 428	Ceramic Chip NP0 1n 5% 63V, size 1206	217005
C 429	C Ceramic 100n 20% 50V	213401
C 430	C Ceramic 1n00 -20+80% 63V	213013
C 431	C Ceramic 1n00 -20+80% 63V	213013
C 432	Ceramic Chip NP0 1n 5% 63V, size 1206	217005
C 433	Ceramic Chip NP0 1n 5% 63V, size 1206	217005
C 434	Ceramic Chip NP0 1n 5% 63V, size 1206	217005
C 435	Ceramic Chip NP0 1n 5% 63V, size 1206	217005
C 436	Ceramic Chip X7R 100n 20% 50V, size 1206	217006
C 437	Ceramic Chip NP0 22p 5% 63V, size 1206	217003
C 438	C Ceramic 100n 20% 50V	213401
C 439	C Ceramic 100n 20% 50V	213401
C 440	Ceramic Chip X7R 100n 20% 50V, size 1206	217006
C 441	Ceramic Chip NP0 22p 5% 63V, size 1206	217003
C 900	C Ceramic 100n 20% 50V	213401
C 901	C Ceramic 100n 20% 50V	213401
C 902	C Ceramic 100n 20% 50V	213401
C 903	C Ceramic 100n 20% 50V	213401
C 904	C Ceramic 100n 20% 50V	213401
C 905	C Ceramic 100n 20% 50V	213401
C 906	C Ceramic 100n 20% 50V	213401
C 907	C Ceramic 100n 20% 50V	213401
C 908	C Solid Aluminium 10u 20% 16V Short Type	265108
C 909	C Solid Aluminium 10u 20% 16V Short Type	265108
C 910	C Solid Aluminium 10u 20% 16V Short Type	265108
C 911	Electrolytic 100/25, 2000h/85°, R:6.3*11, RM2	261073
C 912	C Ceramic 100n 20% 50V	213401

C 913	C Ceramic 100n 20% 50V	213401
C 920	Ceramic Chip X7R 100n 20% 50V, size 1206	217006
C 921	C Ceramic 100n 20% 50V	213401
C 922	C Ceramic 100n 20% 50V	213401
C 923	C Ceramic 100n 20% 50V	213401
C 924	C Ceramic 100n 20% 50V	213401
C 925	C Solid Aluminium 10u 20% 16V Short Type	265108
C 926	C Solid Aluminium 10u 20% 16V Short Type	265108
C 931	C Ceramic 100n 20% 50V	213401
C 932	C Ceramic 100n 20% 50V	213401
C 933	Electrolytic 10/63, 2000h/85°, R:5*11, RM2	261074
C 936	C Ceramic 100n 20% 50V	213401

DIODES

CR 100	Diode cap BB809 Vr-28V Ir-10nA	350063
CR 101	Diode cap BB809 Vr-28V Ir-10nA	350063
CR 102	Diode cap BB809 Vr-28V Ir-10nA	350063
CR 103	Diode cap BB809 Vr-28V Ir-10nA	350063
CR 104	Diode Hot Carrier 5082-2811 S 8V DO35	350032
CR 200	Diode general purpose BAS16 SOT23	352006
CR 201	Diode general purpose BAS16 SOT23	352006
CR 202	Diode general purpose BAS16 SOT23	352006
CR 203	Diode BAV45 Si Vr-20V If-50mA	350432
CR 204	Diode dual schottky HSMS-2812 SOT23	352003
CR 206	Diode zener BZX84-C6V2 SOT23	352010
CR 207	Diode Hot Carrier 5082-2811 S 8V DO35	350032
CR 208	Diode general purpose BAS16 SOT23	352006
CR 209	Diode zener BZX84-C4V7 SOT23	352007
CR 301	Diode BAT18 band switching SOT23	352005
CR 302	Diode BAT18 band switching SOT23	352005
CR 303	Diode BBY40 variable capacitance diode 28V 50nA SOT23	352001
CR 304	Diode BBY40 variable capacitance diode 28V 50nA SOT23	352001
CR 305	Diode BAT18 band switching SOT23	352005
CR 306	Diode BBY40 variable capacitance diode 28V 50nA SOT23	352001
CR 307	Diode BBY40 variable capacitance diode 28V 50nA SOT23	352001
CR 308	Diode BAT18 band switching SOT23	352005
CR 309	Diode dual schottky HSMS-2812 SOT23	352003
CR 310	Diode zener BZX84-C2V7 SOT23	352008
CR 311	Diode zener C2V0 0.3W DO35	350654
CR 312	Diode BAT18 band switching SOT23	352005
CR 400	Diode general purpose BAS16 SOT23	352006
CR 401	Diode zener BZX84-C2V7 SOT23	352008
CR 402	Diode general purpose BAS16 SOT23	352006
CR 403	Diode general purpose BAS16 SOT23	352006
CR 404	Diode general purpose BAS16 SOT23	352006
CR 405	Diode zener BZX84-C2V7 SOT23	352008
CR 406	Diode zener BZX84-C3V9 SOT23	352009
CR 407	Diode zener BZX84-C3V3 SOT23	352011
CR 408	Diode general purpose BAS16 SOT23	352006
CR 409	Diode general purpose BAS16 SOT23	352006
CR 410	Diode general purpose BAS16 SOT23	352006
CR 411	Diode general purpose BAS16 SOT23	352006
CR 412	Diode general purpose BAS16 SOT23	352006

CR 413	Diode general purpose BAS16 SOT23	352006
CR 414	Diode general purpose BAS16 SOT23	352006
CR 415	Diode general purpose BAS16 SOT23	352006
CR 416	Diode general purpose BAS16 SOT23	352006
CR 417	Diode zener BZX84-C4V7 SOT23	352007

CONNECTORS

J 200	Coax Cable For PCB Mounting 185mm	617957
J 300	Con SMB Angle Pcb Mounting 21,15mm	800330
J 301	Con SMB Angle Pcb Mounting 21,15mm	800330
J 900	DIN 41612 64 pol male 90°, C/2 class II	805958

CHOKES

L 100	Choke Mini 10u 5% 0.23A	703077
L 101	Chip Coil 1u 5%	703802
L 102	Choke Mini 10u 5% 0.23A	703077
L 103	Tuneable Inductor 6.5 Turn	740245
L 104	Chip Coil 1u 5%	703802
L 106	Chip Coil 1u 5%	703802
L 201	Chip Coil 1u 5%	703802
L 202	Chip Coil 68nH 10%	703815
L 300	Tuneable Inductor 7.5 Turn	740243
L 301	Tuneable Inductor 3.5 Turn	740238
L 302	Tuneable Inductor 3.5 Turn	740238
L 303	Tuneable Inductor 1.5 Turn	740242
L 304	Coil For FM-MOD RE122 L304	740246
L 305	Chip Coil 1u 5%	703802
L 307	Chip Coil 1u 5%	703802
L 309	Chip Coil 1u 5%	703802
L 310	Chip Coil 330nH 10%	703809
L 311	Chip Coil 330nH 10%	703809
L 312	Chip Coil 330nH 10%	703809
L 313	Chip Coil 1u 5%	703802
L 314	Chip Coil 1u 5%	703802
L 315	Chip Coil 15n 10%	703814
L 316	Chip Coil 1u 5%	703802
L 317	Chip Coil 1u 5%	703802
L 318	Chip Coil 1u 5%	703802
L 400	Chip Coil 3u3 10%	703808
L 401	Chip Coil 1u 5%	703802
L 402	Chip Coil 1u 5%	703802
L 403	Chip Coil 1u 5%	703802
L 404	Choke Mini 10u 5% 0.23A	703077
L 405	Choke Mini 10u 5% 0.23A	703077
L 900	RF-choke six-hole core green	731204
L 901	RF-choke six-hole core green	731204
L 910	RF-choke six-hole core green	731204
L 911	RF-choke six-hole core green	731204
L 916	RF-choke six-hole core green	731204

TRANSISTORS

Q 100	Transistor JFet-N J112, TO92	360114
Q 101	Transistor 2xSST309 2-Parrede Fets	361018
Q 102	Transistor 2xSST309 2-Parrede Fets	361018
Q 103	Transistor BC849C Sot23	361009
Q 104	Transistor BC857B PNP SOT23	361010
Q 105	Transistor BC849C Sot23	361009
Q 106	Transistor BC849C Sot23	361009
Q 108	Transistor BC849C Sot23	361009
Q 109	Transistor BC857B PNP SOT23	361010
Q 200	Transistor 2N3904 NPN Vco:40V Ic:0.2A TO92	360064
Q 202	Transistor BC849C Sot23	361009
Q 203	Transistor BC857B PNP SOT23	361010
Q 204	Transistor 2N3906 PNP Vco:-40V Ic:-0.2A TO92	360062
Q 205	Transistor 2N3904 NPN Vco:40V Ic:0.2A TO92	360064
Q 206	Transistor 2N3906 PNP Vco:-40V Ic:-0.2A TO92	360062
Q 207	Transistor 2N3904 NPN Vco:40V Ic:0.2A TO92	360064
Q 209	Transistor 2N3904 NPN Vco:40V Ic:0.2A TO92	360064
Q 210	Transistor 2N3904 NPN Vco:40V Ic:0.2A TO92	360064
Q 211	Transistor BFR93A SMD npn	361002
Q 212	Transistor BFR93A SMD npn	361002
Q 213	Transistor BC857B PNP SOT23	361010
Q 300	Transistor 2xSST309 2-Parrede Fets	361018
Q 301	Transistor 2xSST309 2-Parrede Fets	361018
Q 302	Transistor BC849C Sot23	361009
Q 303	Transistor BC849C Sot23	361009
Q 304	Transistor BC857B PNP SOT23	361010
Q 305	Transistor BC849C Sot23	361009
Q 306	Transistor BC857B PNP SOT23	361010
Q 307	Transistor BF840 Sot23 NPN	361008
Q 308	Transistor BF550 Sot23 PNP	361011
Q 309	Transistor BF840 Sot23 NPN	361008
Q 310	Transistor BC857B PNP SOT23	361010
Q 400	Transistor BF550 Sot23 PNP	361011
Q 401	Transistor BF550 Sot23 PNP	361011
Q 402	Transistor jFet N/channel SST112	361012
Q 403	Transistor jFet N/channel SST112	361012
Q 404	Transistor jFet N/channel SST112	361012
Q 405	Transistor jFet N/channel SST112	361012
Q 406	Transistor jFet N/channel SST112	361012
Q 407	Transistor BC857B PNP SOT23	361010
Q 408	Transistor BC857B PNP SOT23	361010
Q 409	Transistor BC849C Sot23	361009
Q 410	Transistor BC857B PNP SOT23	361010
Q 900	Transistor VN0106N3 Power Mos N-CH	360245

INTEGRATED ANALOG CIRCUITS

QA 100	IC LM833 Low Noise Dual OPA SO8	366024
QA 101	IC 5534 Low Noise Op-amp SO-8	366015
QA 102	IC MAR-4 Monolithic RF Amplifier	364823
QA 103	IC ADG201AKR Quad Spst Switch	366016
QA 104	IC LM79L12 3-terminal negative regulator -12V 100mA	364726

QA 200 IC LF356H Jfet OP Amp	364745
QA 300 IC MAR-4 Monolithic RF Amplifier	364823
QA 302 IC MAR-4 Monolithic RF Amplifier	364823
QA 400 IC 5534 Low Noise Op-amp SO-8	366015
QA 401 IC 5534 Low Noise Op-amp SO-8	366015
QA 402 IC 3054 transistor array	364070
QA 403 IC LM311 Voltage Comparator	366014
QA 404 IC LF356 op amp	364203
QA 405 IC S042P Mixer	364152
QA 406 IC LM311 Voltage Comparator	366014
QA 900 IC L7905CT - 5V regulator	364884
QA 901 IC L4805 Low Drop Out Voltage Reg.	365016
QA 902 IC LM324 Low Power OP-Amp SO-14	366010
QA 903 IC LM317LM Adj.Voltage reg	366023

INTEGRATED DIGITAL CIRCUITS

QD 100 IC 74HC4052 Dual 4 CH Multiplex smd	366012
QD 101 IC 74HC4052 Dual 4 CH Multiplex smd	366012
QD 102 IC 74HC4052 Dual 4 CH Multiplex smd	366012
QD 200 Piggy Back for Pre-scaler	902324
QD 202 IC 10102 quad NOR gate	364322
QD 203 Prog Pal QD203 For RE122 901-857	369353
QD 205 IC MC14568 Phase Comparator/Prog Counter	366019
QD 206 IC HFE4518 Dual Bcd Counter So-16	366017
QD 207 IC 10102 quad NOR gate	364322
QD 400 IC 10116 tripl line rec.	364331
QD 401 IC 10116 tripl line rec.	364331
QD 900 IC 74HC14 Hex Inv Schmitt Trigger SO-14	366009
QD 901 RExxx Seriel Bus Receiver For 6 Adr. 364-876	369331
QD 902 IC 4094 8-Stage Shift-And-Store Bus Reg SO-16	366011
QD 903 IC 4094 8-Stage Shift-And-Store Bus Reg SO-16	366011
QD 904 IC 4094 8-Stage Shift-And-Store Bus Reg SO-16	366011
QD 905 IC 74HC00 Quad 2-Input Nand smd	366018

RESISTORS

R 100 Cermet Trimpot 1K 10% 0.5W TC100	182424
R 101 Metal Film Chip 31E6 1% 0.2W TC50	147075
R 102 Metal Film Chip 100E 1% 0.250W TC50	147014
R 103 Metal Film Chip 383E 1% 0.2W TC50	147058
R 104 Metal Film Chip 383E 1% 0.2W TC50	147058
R 105 Metal Film 1K80 0.1% 0.25W TC15	141308
R 106 Metal Film Chip 200E 1% 0.2W TC50	147118
R 107 Metal Film Chip 31E6 1% 0.2W TC50	147075
R 108 Metal Film Chip 31E6 1% 0.2W TC50	147075
R 109 Metal Film Chip 31E6 1% 0.2W TC50	147075
R 110 Metal Film Chip 100E 1% 0.250W TC50	147014
R 111 R Metal Film 1K69 1% 0.5W TC50	114169
R 112 Cermet Trimpot 200E 10% 0.5W	182329
R 115 Metal Film Chip 10K0 1% 0.2W TC50	147039
R 116 Metal Film 750E 0.1% 0.25W TC15	141309
R 117 Metal Film 150E 0.1% 0.25W TC15	141306
R 118 Metal Film 301E 0.1% 0.25W TC15	141360

R 119	Metal Film 232E 0.1% 0.25W TC15	141310
R 120	Metal Film 232E 0.1% 0.25W TC15	141310
R 121	Cermet Trimpot 2K2 10% 0.5W	182328
R 122	Metal Film Chip 100K 1% 0.2W TC50	147062
R 123	Metal Film Chip 5K62 1% 0.2W TC50	147086
R 124	Metal Film Chip 100K 1% 0.2W TC50	147062
R 125	Metal Film Chip 1K00 1% 0.2W TC50	147040
R 126	Metal Film Chip 100E 1% 0.250W TC50	147014
R 127	Metal Film Chip 56K2 1% 0.2W TC50	147079
R 128	Metal Film Chip 10K0 1% 0.2W TC50	147039
R 129	Metal Film Chip 1M00 1% 0.2W TC50	147084
R 130	Metal Film Chip 1M00 1% 0.2W TC50	147084
R 131	Metal Film Chip 1M00 1% 0.2W TC50	147084
R 132	Cermet Trimpot 47K 20% 0.5W TC70	182314
R 133	Metal Film 150E 0.1% 0.25W TC15	141306
R 134	Metal Film 150E 0.1% 0.25W TC15	141306
R 135	Metal Film Chip 5K62 1% 0.2W TC50	147086
R 136	Metal Film Chip 56K2 1% 0.2W TC50	147079
R 137	Metal Film Chip 3K83 1% 0.2W TC50	147064
R 138	Metal Film Chip 21K5 1% 0.2W TC50	147066
R 139	Metal Film Chip 100E 1% 0.250W TC50	147014
R 140	Metal Film Chip 10K0 1% 0.2W TC50	147039
R 141	Metal Film Chip 10K0 1% 0.2W TC50	147039
R 142	Metal Film Chip 1K21 1% 0.2W TC50	147061
R 201	Metal Film Chip 2K61 1% 0.2W TC50	147038
R 202	Metal Film Chip 12K1 1% 0.2W TC50	147047
R 203	Metal Film Chip 464E 1% 0.2W TC50	147035
R 204	Metal Film Chip 12K1 1% 0.2W TC50	147047
R 205	Metal Film Chip 100E 1% 0.250W TC50	147014
R 206	Metal Film Chip 46K4 1% 0.2W TC50	147042
R 207	Metal Film Chip 2K21 1% 0.2W TC50	147060
R 208	Metal Film Chip 215E 1% 0.2W TC50	147109
R 209	Metal Film Chip 1K78 1% 0.2W TC50	147037
R 210	Metal Film Chip 100E 1% 0.250W TC50	147014
R 211	Metal Film Chip 2K21 1% 0.2W TC50	147060
R 212	Metal Film Chip 100K 1% 0.2W TC50	147062
R 213	Metal Film Chip 56K2 1% 0.2W TC50	147079
R 214	Metal Film Chip 10K0 1% 0.2W TC50	147039
R 215	Metal Film Chip 1M00 1% 0.2W TC50	147084
R 216	Metal Film Chip 10K0 1% 0.2W TC50	147039
R 218	Metal Film Chip 10K0 1% 0.2W TC50	147039
R 219	Metal Film Chip 10K0 1% 0.2W TC50	147039
R 220	Metal Film Chip 10K0 1% 0.2W TC50	147039
R 221	Metal Film Chip 10K0 1% 0.2W TC50	147039
R 222	Metal Film Chip 6K81 1% 0.2W TC50	147090
R 223	Metal Film Chip 8K25 1% 0.2W TC50	147065
R 224	Metal Film Chip 100E 1% 0.250W TC50	147014
R 225	Metal Film Chip 1K00 1% 0.2W TC50	147040
R 226	Metal Film Chip 10K0 1% 0.2W TC50	147039
R 227	Metal Film Chip 5K62 1% 0.2W TC50	147086
R 228	Metal Film Chip 26K1 1% 0.2W TC50	147092
R 229	Metal Film Chip 6K81 1% 0.2W TC50	147090
R 230	Metal Film Chip 8K25 1% 0.2W TC50	147065
R 231	Metal Film Chip 1K00 1% 0.2W TC50	147040

R 232	Metal Film Chip 100E 1% 0.250W TC50	147014
R 233	Metal-glazed film 15M 10% 0.125W TC200	109016
R 234	Metal Film Chip 82K5 1% 0.2W TC50	147087
R 235	Metal Film Chip 6K81 1% 0.2W TC50	147090
R 236	Metal Film Chip 3K83 1% 0.2W TC50	147064
R 237	Metal Film Chip 383E 1% 0.2W TC50	147058
R 238	Metal Film Chip 316E 1% 0.2W TC50	147021
R 239	Metal Film Chip 1K47 1% 0.2W TC50	147080
R 240	Metal Film Chip 464E 1% 0.2W TC50	147035
R 241	Metal Film Chip 464E 1% 0.2W TC50	147035
R 242	Metal Film Chip 215E 1% 0.2W TC50	147109
R 243	Metal Film Chip 316E 1% 0.2W TC50	147072
R 244	Metal Film Chip 1K00 1% 0.2W TC50	147040
R 245	Metal Film Chip 1K00 1% 0.2W TC50	147040
R 246	Metal Film Chip 464E 1% 0.2W TC50	147035
R 247	Metal Film Chip 464E 1% 0.2W TC50	147035
R 248	Metal Film Chip 1K78 1% 0.2W TC50	147037
R 249	Metal Film Chip 825E 1% 0.2W TC50	147077
R 250	Metal Film Chip 562E 1% 0.2W TC50	147036
R 251	Metal Film Chip 1K47 1% 0.2W TC50	147080
R 252	Metal Film Chip 464E 1% 0.2W TC50	147035
R 253	Metal Film Chip 464E 1% 0.2W TC50	147035
R 254	Metal Film Chip 121K 1% 0.2W TC50	147069
R 255	Metal Film Chip 464E 1% 0.2W TC50	147035
R 300	Metal Film Chip 2K21 1% 0.2W TC50	147060
R 301	Metal Film Chip 2K21 1% 0.2W TC50	147060
R 302	Metal Film Chip 2K21 1% 0.2W TC50	147060
R 303	Metal Film Chip 562E 1% 0.2W TC50	147036
R 304	Metal Film Chip 316E 1% 0.2W TC50	147072
R 305	Metal Film Chip 316E 1% 0.2W TC50	147072
R 308	Metal Film Chip 82K5 1% 0.2W TC50	147087
R 309	Metal Film Chip 215E 1% 0.2W TC50	147109
R 310	Metal Film Chip 215E 1% 0.2W TC50	147109
R 311	Metal Film Chip 82K5 1% 0.2W TC50	147087
R 313	Metal Film Chip 100E 1% 0.250W TC50	147014
R 314	Metal Film Chip 5K62 1% 0.2W TC50	147086
R 315	Metal Film Chip 3K83 1% 0.2W TC50	147064
R 317	Metal Film Chip 100E 1% 0.250W TC50	147014
R 318	Metal Film Chip 31K6 1% 0.2W TC50	147085
R 319	Metal Film Chip 31E6 1% 0.2W TC50	147075
R 320	Metal Film Chip 1K78 1% 0.2W TC50	147037
R 321	Metal Film Chip 100K 1% 0.2W TC50	147062
R 322	Metal Film Chip 3K83 1% 0.2W TC50	147064
R 323	Metal Film Chip 100K 1% 0.2W TC50	147062
R 324	Cermet Trimpot 47K 20% 0.5W TC70	182314
R 325	Metal Film Chip 10K0 1% 0.2W TC50	147039
R 326	Metal Film Chip 100K 1% 0.2W TC50	147062
R 327	Metal Film Chip 1K47 1% 0.2W TC50	147080
R 328	Metal Film Chip 2K61 1% 0.2W TC50	147038
R 329	Metal Film Chip 21E5 1% 0.2W TC50	147052
R 330	Metal Film Chip 31E6 1% 0.2W TC50	147075
R 331	Metal Film Chip 4K64 1% 0.2W TC50	147043
R 332	Metal Film Chip 825E 1% 0.2W TC50	147077
R 333	Metal Film Chip 221E 1% 0.125W TC50	147008

R 334	Metal Film Chip 46E4 1% 0.2W TC50	147016
R 335	Metal Film Chip 1K00 1% 0.2W TC50	147040
R 336	Metal Film Chip 147E 1% 0.2W TC50	147033
R 337	Metal Film Chip 1K00 1% 0.2W TC50	147040
R 338	Metal Film Chip 56E2 1% 0.2W TC50	147030
R 339	Metal Film Chip 383E 1% 0.2W TC50	147058
R 340	Metal Film Chip 383E 1% 0.2W TC50	147058
R 341	Metal Film Chip 316E 1% 0.2W TC50	147072
R 342	Metal Film Chip 100E 1% 0.250W TC50	147014
R 343	Metal Film Chip 56E2 1% 0.2W TC50	147030
R 344	Metal Film Chip 178E 1% 0.2W TC50	147046
R 345	Metal Film Chip 464E 1% 0.2W TC50	147035
R 346	Metal Film Chip 464E 1% 0.2W TC50	147035
R 347	Metal Film Chip 464E 1% 0.2W TC50	147035
R 348	Metal Film Chip 464E 1% 0.2W TC50	147035
R 349	Metal Film Chip 2K15 1% 0.2W TC50	147051
R 350	Metal Film Chip 4K64 1% 0.2W TC50	147043
R 351	Metal Film Chip 100E 1% 0.250W TC50	147014
R 352	Metal Film Chip 147E 1% 0.2W TC50	147033
R 400	Metal Film Chip 464E 1% 0.2W TC50	147035
R 401	Metal Film Chip 464E 1% 0.2W TC50	147035
R 402	Metal Film Chip 100E 1% 0.250W TC50	147014
R 404	Metal Film Chip 100E 1% 0.250W TC50	147014
R 405	Metal Film Chip 100E 1% 0.250W TC50	147014
R 406	Metal Film Chip 31E6 1% 0.2W TC50	147075
R 407	Metal Film Chip 5K62 1% 0.2W TC50	147086
R 408	Metal Film Chip 31E6 1% 0.2W TC50	147075
R 409	Metal Film Chip 147E 1% 0.2W TC50	147033
R 410	Metal Film Chip 147E 1% 0.2W TC50	147033
R 412	Metal Film Chip 178E 1% 0.2W TC50	147046
R 413	Metal Film Chip 178E 1% 0.2W TC50	147046
R 414	Metal Film Chip 221E 1% 0.125W TC50	147008
R 415	Metal Film Chip 31E6 1% 0.2W TC50	147075
R 416	Metal Film Chip 221E 1% 0.125W TC50	147008
R 417	Metal Film Chip 14K7 1% 0.2W TC50	147113
R 418	Metal Film Chip 100E 1% 0.250W TC50	147014
R 419	Metal Film Chip 14K7 1% 0.2W TC50	147113
R 420	Metal Film Chip 178E 1% 0.2W TC50	147046
R 421	Metal Film Chip 147E 1% 0.2W TC50	147033
R 422	Metal Film Chip 178E 1% 0.2W TC50	147046
R 423	Metal Film Chip 100K 1% 0.2W TC50	147062
R 424	Metal Film Chip 100K 1% 0.2W TC50	147062
R 425	Metal Film Chip 100K 1% 0.2W TC50	147062
R 426	Metal Film Chip 464E 1% 0.2W TC50	147035
R 427	Metal Film Chip 261E 1% 0.2W TC50	147045
R 428	Metal Film Chip 383E 1% 0.2W TC50	147058
R 429	Metal Film Chip 5K62 1% 0.2W TC50	147086
R 430	Metal Film Chip 6K81 1% 0.2W TC50	147090
R 431	Metal Film Chip 1K78 1% 0.2W TC50	147037
R 432	Metal Film Chip 1K00 1% 0.2W TC50	147040
R 433	Metal Film Chip 2K21 1% 0.2W TC50	147060
R 434	Metal Film Chip 464E 1% 0.2W TC50	147035
R 435	Metal Film Chip 121E 1% 0.2W TC50	147022
R 436	Metal Film Chip 100K 1% 0.2W TC50	147062

R 437	Metal Film Chip 10K0 1% 0.2W TC50	147039
R 438	Metal Film Chip 2K21 1% 0.2W TC50	147060
R 439	Metal Film Chip 100E 1% 0.250W TC50	147014
R 440	Metal Film Chip 10K0 1% 0.2W TC50	147039
R 441	Metal Film Chip 100E 1% 0.250W TC50	147014
R 442	Metal Film Chip 31E6 1% 0.2W TC50	147075
R 443	Metal Film Chip 10K0 1% 0.2W TC50	147039
R 444	Metal Film Chip 10K0 1% 0.2W TC50	147039
R 445	Metal Film Chip 10K0 1% 0.2W TC50	147039
R 446	Metal Film Chip 12K1 1% 0.2W TC50	147047
R 447	Metal Film Chip 4K64 1% 0.2W TC50	147043
R 448	Metal Film Chip 51K1 1% 0.2W TC50	147111
R 449	Metal Film Chip 38K3 1% 0.2W TC50	147091
R 450	Metal Film Chip 5K62 1% 0.2W TC50	147086
R 451	Metal Film Chip 10K0 1% 0.2W TC50	147039
R 452	Metal Film Chip 3K16 1% 0.2W TC50	147055
R 453	Metal Film Chip 21K5 1% 0.2W TC50	147066
R 454	Metal Film Chip 31E6 1% 0.2W TC50	147075
R 455	Metal Film Chip 3K16 1% 0.2W TC50	147055
R 456	Metal Film Chip 12K1 1% 0.2W TC50	147047
R 457	Metal Film Chip 464E 1% 0.2W TC50	147035
R 458	Metal Film Chip 464E 1% 0.2W TC50	147035
R 459	Metal Film Chip 464E 1% 0.2W TC50	147035
R 460	Metal Film Chip 3K83 1% 0.2W TC50	147064
R 461	Metal Film Chip 1K00 1% 0.2W TC50	147040
R 462	Metal Film Chip 5K62 1% 0.2W TC50	147086
R 463	Metal Film Chip 31E6 1% 0.2W TC50	147075
R 464	Metal Film Chip 46K4 1% 0.2W TC50	147042
R 465	Metal Film Chip 178K 1% 0.2W TC50	147095
R 466	Metal Film Chip 100E 1% 0.250W TC50	147014
R 467	Metal Film Chip 464E 1% 0.2W TC50	147035
R 468	Metal Film Chip 464E 1% 0.2W TC50	147035
R 469	Metal Film Chip 464E 1% 0.2W TC50	147035
R 470	Metal Film Chip 464E 1% 0.2W TC50	147035
R 471	Metal Film Chip 4K64 1% 0.2W TC50	147043
R 472	Metal Film Chip 31E6 1% 0.2W TC50	147075
R 473	Metal Film Chip 1K00 1% 0.2W TC50	147040
R 900	Metal Film Chip 21K5 1% 0.2W TC50	147066
R 901	Metal Film Chip 21K5 1% 0.2W TC50	147066
R 902	Metal Film Chip 4K64 1% 0.2W TC50	147043
R 903	Metal Film Chip 4K64 1% 0.2W TC50	147043
R 905	Metal Film Chip 215E 1% 0.2W TC50	147109
R 906	Metal Film Chip 3K83 1% 0.2W TC50	147064
R 907	Metal Film Chip 21K5 1% 0.2W TC50	147066

TESTPOINTS

TP 100	Pin header 3 pol straight l:6.7mm with lock	805894
TP 101	Pin header 3 pol straight l:6.7mm with lock	805894
TP 300	Pin header 3 pol straight l:6.7mm with lock	805894
TP 401	Pin header 3 pol straight l:6.7mm with lock	805894
TP 402	Pin header 3 pol straight l:6.7mm with lock	805894
TP 403	Pin header 3 pol straight l:6.7mm with lock	805894

MIXERS

U 300	Double Balanced Mixer 1-500MHZ SBL-1	910120

MISCELLANEOUS

	Screw Pozidrive panhead M2.5x8	008208
	Screw Pozidrive Panhead M3X10	008310
	Screw Pozidrive panhead M3*12	008312
	Screw Pozidrive Countersunk M2,5x20	009220
	Nut hexagon M3	031302
	Washer ø5/9x2,5	042525
	Lock washer D3,2/5,5x0,45	046405
	Tubular Rivet 2.5X10	060310
	Tubular Rivet Ø2,5x0,25x3	060408
	Bushing ø8/2,8x13	066155
	Ceramic Chip NP0 27p 5% 63V, size 1206	217021
	Mounting Acc. for TO-220	816163
	Rectangular Washer F. TO220	816178
	Teflon Insulator (Diam. 4.4)	823904
	L-piece for PCB	857041
	Spring For RE122 Synthesizer 4	878081
	Spring 0.2 Berylium Cobber	878085
	Shield Box 4 Top	881017
	Shield Box 5 Top	881018
	Shield Box 6 Top	881020
	Shield Box 7 Top	881022
	Shield Issue:1	881049
	Shield Box Bottom	881050
	Cover Iss.1	881051
	Shield Box Cover Iss.1	881052
	Shield box cover for 881017	881063
	Cover Plate Middle for RE122	933089
	PCB For RE122 FM Modulator	971403
	Labels For PCB With 72 Pcs Each Of Ark 48x7	980722
GND1	Solder Terminal 0.1 O2	823303
GND2	Solder Terminal 0.1 O2	823303
QDS901	Socket DIL 24 pol, h:4.95 300mil	816274
STA	Insulation Bushing F. TO-220	816214

Piggy-back for prescaler (902324)

CAPACITORS

C 1	Ceramic Chip X7R 100n 20% 50V, size 1206	217006
C 2	Ceramic Chip NP0 1n 5% 63V, size 1206	217005

CONNECTORS

J 1	Socket adaptor DIL/SMD 14 pol	816347

INTEGRATED DIGITAL CIRCUITS

QD 1	IC 100131/100331 Triple D-F.F	366057
QD 2	IC F100314 Quint Diff.Line Recever	366041

RESISTORS

R 1	Metal Film Chip 464E 1% 0.2W TC50	147035
R 2	Metal Film Chip 464E 1% 0.2W TC50	147035
R 3	Metal Film Chip 464E 1% 0.2W TC50	147035
R 4	Metal Film Chip 464E 1% 0.2W TC50	147035
R 5	Metal Film Chip 1K00 1% 0.2W TC50	147040

MISCELLANEOUS

	RE125 piggy back for pre-scaler	971754

13. FREQUENCY CONVERTER

13.1 Circuit Description

Figure 13.1 shows the block diagram of the Frequency Converter.

The input signal from the FM Modulator covers the frequency range from 70 to 250 MHz.

When the output frequency is set within this range, the signal is fed directly to the output of the Frequency Converter.

Frequencies below 70 MHz are produced by frequency division or by frequency conversion of the input signal from the FM modulator.

The frequency range from 45 to 70 MHz is produced by division by two. Refer to sheet 1 of the schematic diagram.

The frequency range from 30 to 45 MHz is produced by division by four. See sheet 1 of the schematic diagram.

To remove harmonics, the frequency dividers are followed by low-pass filters.

The frequency range from 2 to 30 MHz is produced by mixing the input signal (102 to 130 MHz) and a 100 MHz signal. Refer to sheet 2 of the schematic diagram.

The 100 MHz signal is generated by a PLL located on the Frequency Converter, locked to the 10 MHz reference signal. Refer to sheet 3 of the schematic diagram.

A 20 MHz signal from the frequency dividers in the 100 MHz PLL is fed to the FM Modulator to substitute for the 20 MHz FM modulation signal, in order to improve the PM noise when the FM modulator is in CW mode or in AM mode.

The frequency range 0.1 to 2 MHz is produced by mixing a signal (10.1 to 12 MHz), and the 10 MHz reference signal. See sheet 2 of the schematic diagram.

The signal 10.1 to 12 MHz is obtained by Frequency division by ten of the input signal from the FM Modulator.

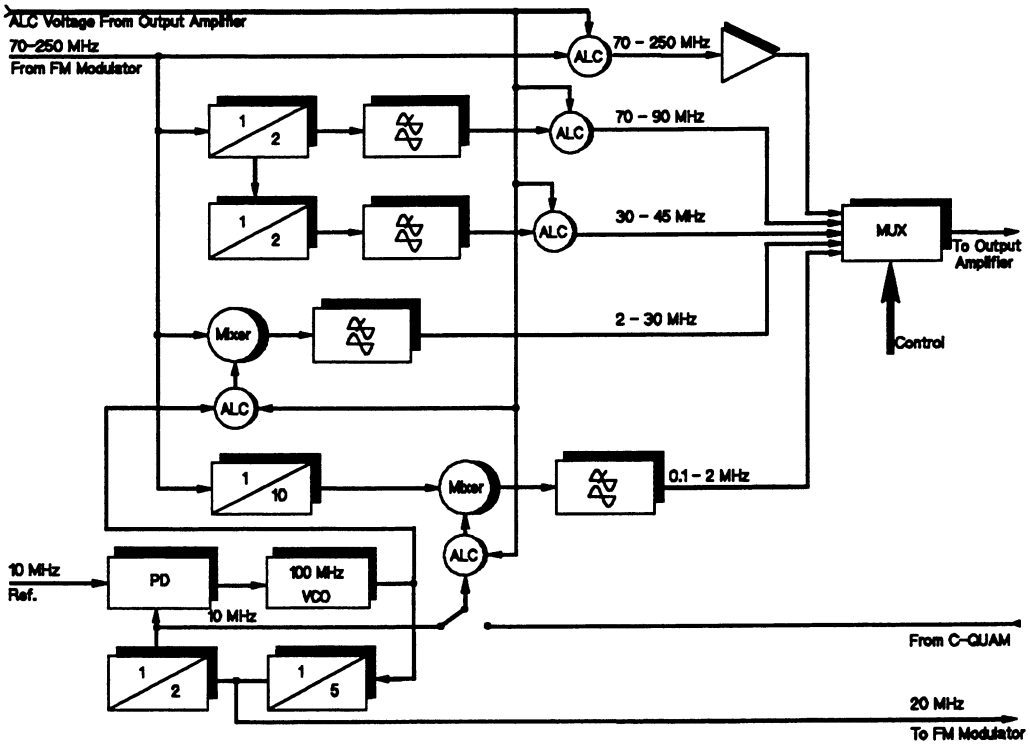

Fig. 13.1 - Block Diagram of Frequency Converter

13.1.1 Automatic Level Control Loop

An Automatic Level Control loop is incorporated. It senses the RF level at a certain point in the Output Amplifier and keeps the RF level at this point constant over the total frequency range.

The level is regulated by controlling the dynamic resistance of PIN diodes:

CR 126	0.1 to 2 MHz
CR 127	2 to 30 MHz
CR 117	30 to 45 MHz
CR 118	45 to 70 MHz
CR 122	70 to 250 MHz

RF signals are routed to the frequency dividers or frequency converters through RF switching diodes.

13.2 Adjustment

To adjust the 100 MHz VCO RF level use potentiometer R246.

Adjust the RF level to -3 dBm measured on TP101.

13.3 Schematic Diagrams

The schematic diagram for the Frequency Converter is located in the following. The diagram number is 985-302.

13.4 Component Locations

The component locations on the Frequency Converter are shown in the following.

13.5 Parts List

A copy of the parts list from production documentation is located in the following. The code number of the assembled PCB is 901-858.

This page is intentionally left blank.

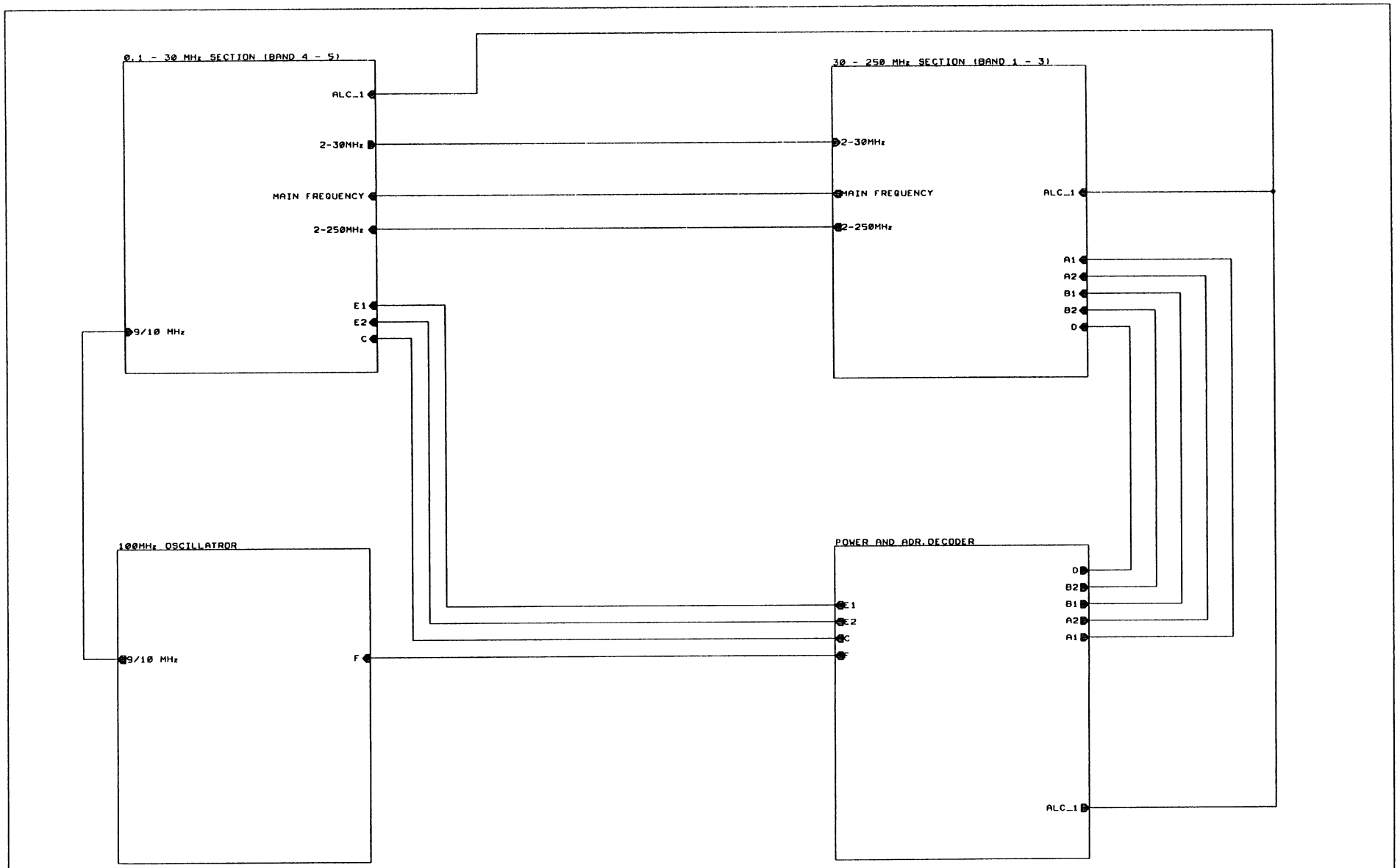

RE TECHNOLOGY AS	
RE122 SIGNAL GENERATOR	
Title	ROOT SHEET
Size A	Document Number 901-858 971-40415 985-302 REV 5c
Date: September 10, 1992	Sheet 1 of 5

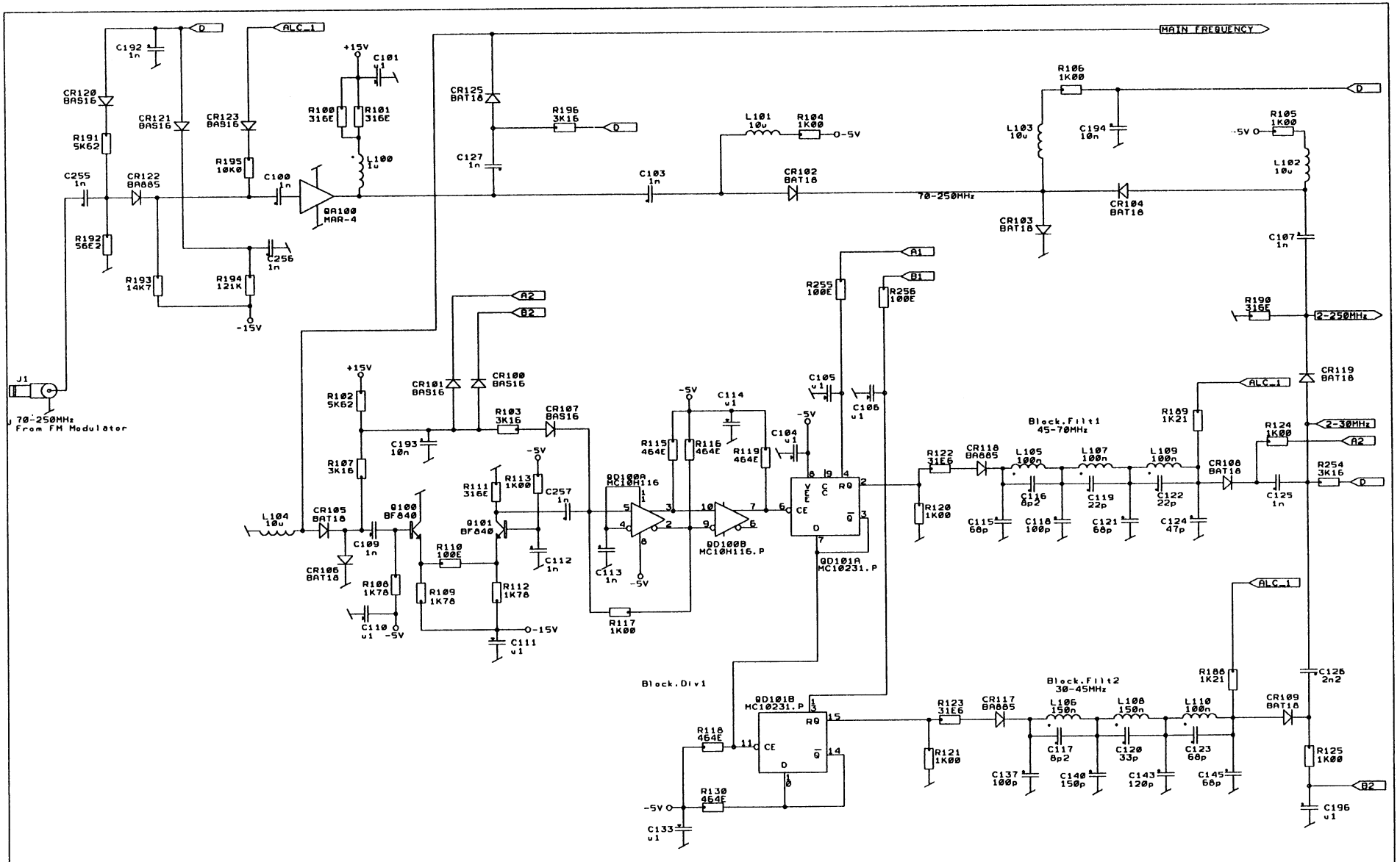

RE TECHNOLOGY AS

RE122 SIGNAL GENERATOR
FREQUENCY CONVERTER

Title: 30-250 MHz SECTION (BAND 1-3)

Size	Document Number	REV
A	901-858 971-40415 985-302	5c

Date: September 10, 1992 Sheet 2 of 5

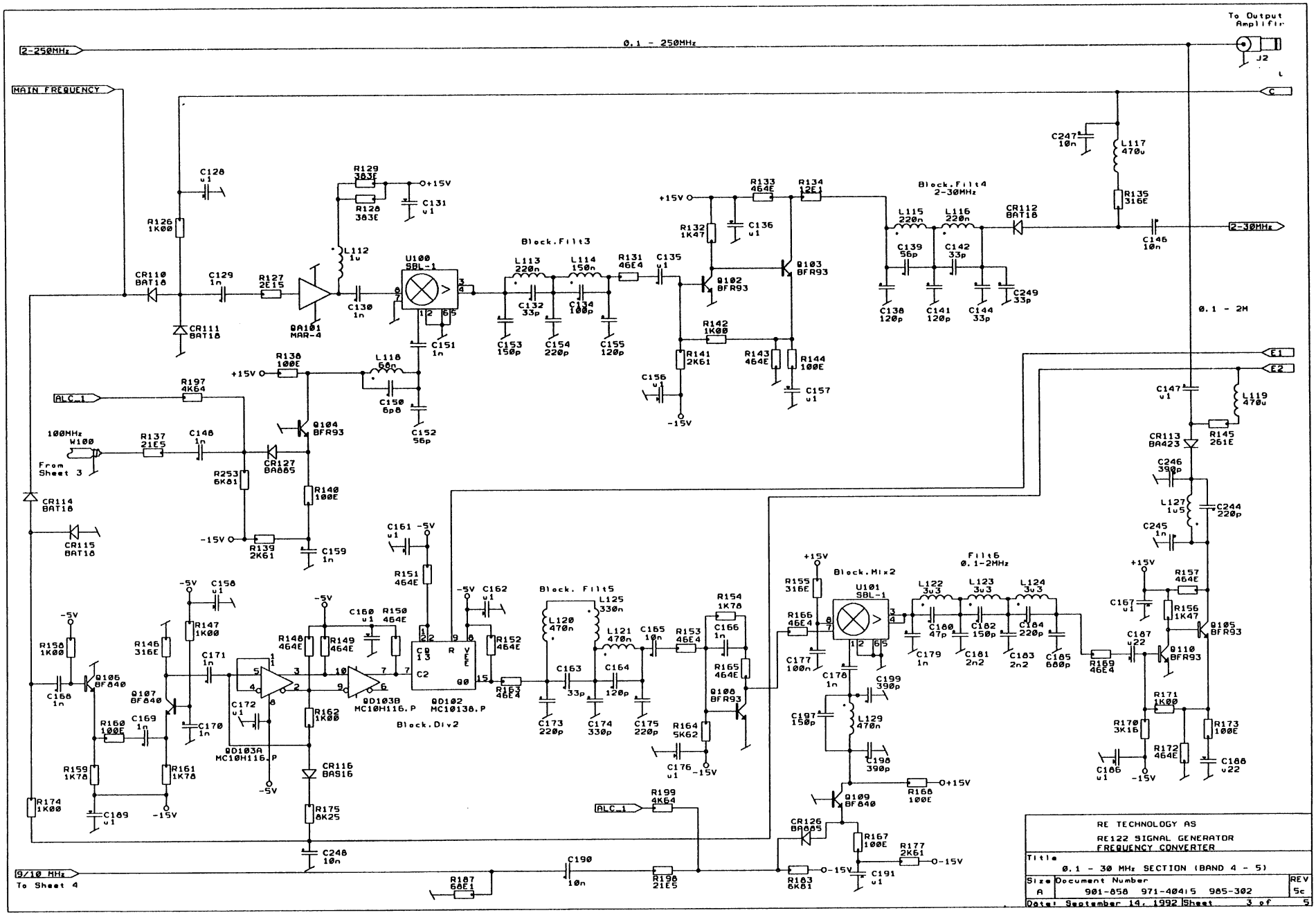
2-250MHz
0.1 - 250MHz
To Output Amplifier
J2
MAIN FREQUENCY
C
2-30MHz
E1
E2
0.1 - 2M
ALC_1
100MHz
W100
From Sheet 3
9/10 MHz
To Sheet 4
Block.Filt3
Block.Filt4
2-30MHz
Block.Mix2
Filt6
0.1-2MHz
Block.Filt5
Block.Div2
U100
SBL-1
U101
SBL-1
RE TECHNOLOGY AS
RE122 SIGNAL GENERATOR
FREQUENCY CONVERTER
Title
0.1 - 30 MHz SECTION (BAND 4 - 5)
Size
A
Document Number
901-858 971-40415 985-302
REV
5c
Date: September 14, 1992
Sheet 3 of 5

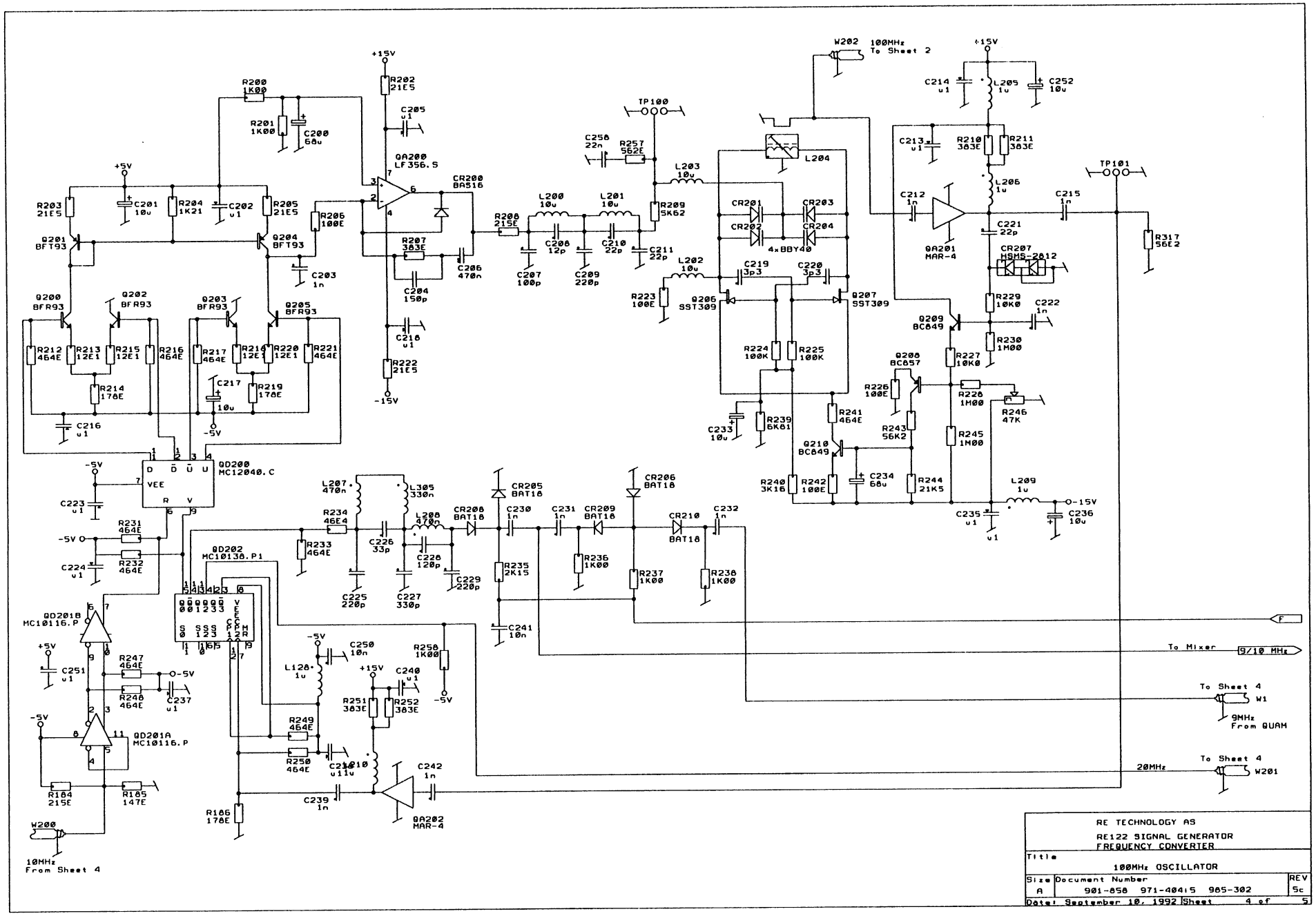
RE TECHNOLOGY AS
RE122 SIGNAL GENERATOR
FREQUENCY CONVERTER
Title
100MHz OSCILLATOR
Size
A
Document Number
901-858 971-40415 985-302
REV
5c
Date: September 10, 1992
Sheet 4 of 5
W202 100MHz To Sheet 2
TP100
TP101
QA200 LF356.S
QD200 MC12040.C
QD202 MC10138.P1
QD201B MC10116.P
QD201A MC10116.P
QA201 MAR-4
QA202 MAR-4
4xBBY40
CR207 HSMS-2812
To Mixer
9/10 MHz
To Sheet 4
W1
9MHz From QUAM
20MHz
W201
W200
10MHz From Sheet 4

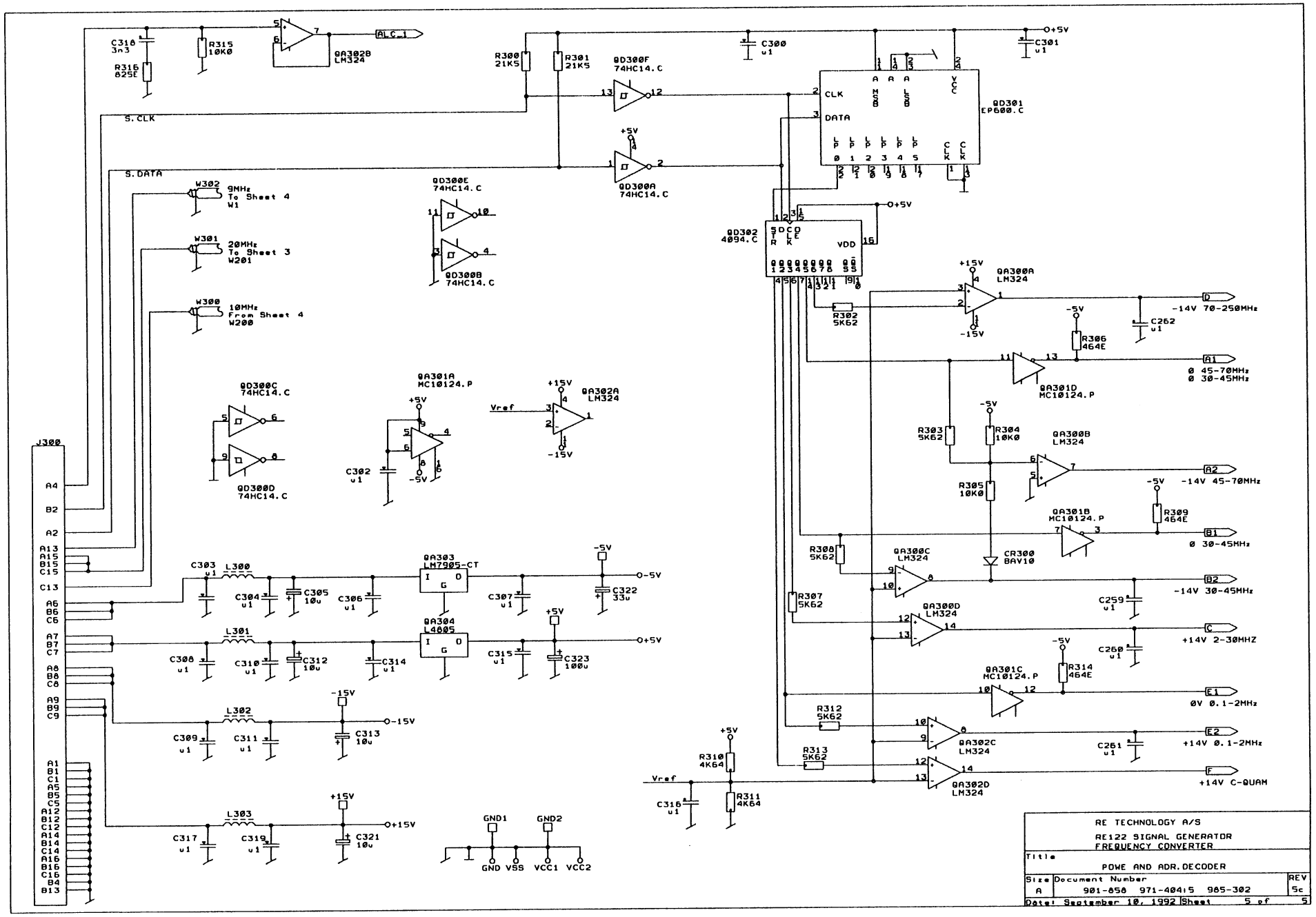
RE TECHNOLOGY A/S
RE122 SIGNAL GENERATOR
FREQUENCY CONVERTER
Title
POWE AND ADR.DECODER
Size A
Document Number 901-858 971-40415 985-302
REV 5c
Date: September 10, 1992
Sheet 5 of 5
J300
QD301 EP600.C
QD302 4094.C
QD300A 74HC14.C
QD300B 74HC14.C
QD300C 74HC14.C
QD300D 74HC14.C
QD300E 74HC14.C
QD300F 74HC14.C
QA300A LM324
QA300B LM324
QA300C LM324
QA300D LM324
QA301A MC10124.P
QA301B MC10124.P
QA301C MC10124.P
QA301D MC10124.P
QA302A LM324
QA302B LM324
QA302C LM324
QA302D LM324
QA303 LM7905-CT
QA304 L4805
W302 9MHz To Sheet 4 W1
W301 20MHz To Sheet 3 W201
W300 10MHz From Sheet 4 W200
S.CLK
S.DATA
ALC.1
Vref
GND1
GND2
GND VSS VCC1 VCC2
D -14V 70-250MHz
A1 0 45-70MHz 0 30-45MHz
A2 -14V 45-70MHz
B1 0 30-45MHz
B2 -14V 30-45MHz
C +14V 2-30MHZ
E1 0V 0.1-2MHz
E2 +14V 0.1-2MHz
F +14V C-QUAM

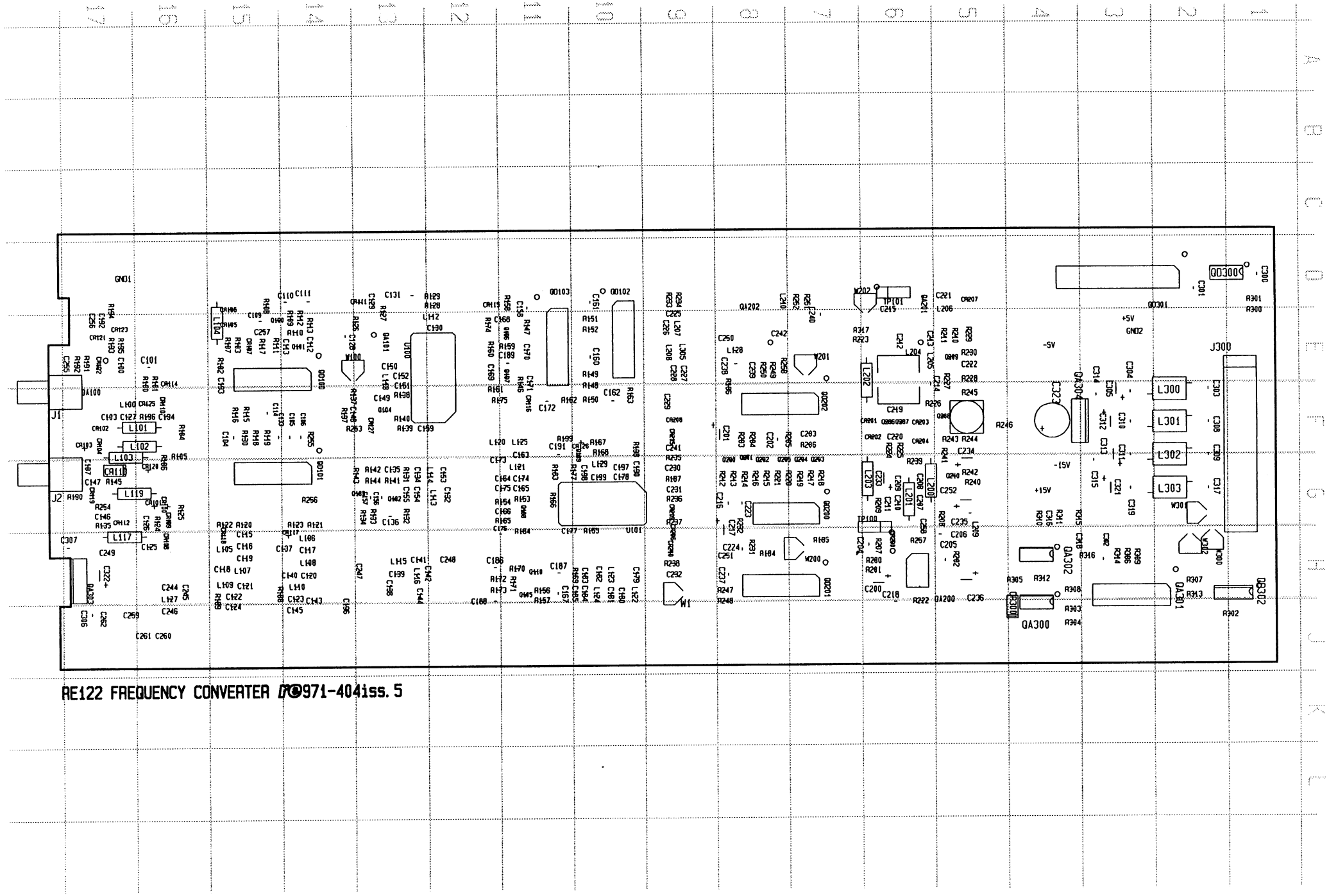

RE122 FREQUENCY CONVERTER D971-404iss. 5

COMP	LOC	COMP	LOC	COMP	LOC	COMP	LOC	COMP	LOC	COMP	LOC	COMP	LOC	COMP	LOC	COMP	LOC	COMP	LOC	COMP	LOC	COMP	LOC
+5V	E3	C134	G13	C210	G6	J1	F18	Q108	G11	R163	F10	R244	F5										
+15V	G4	C135	G13	C211	G6	J2	G18	Q109	G10	R164	G11	R245	F5										
-5V	E4	C136	G13	C212	E6	J300	E2	Q110	H11	R165	G11	R246	F4										
-15V	G4	C137	H14	C213	E6	L100	F17	Q200	G8	R166	G11	R247	H8										
CR100	G16	C138	H13	C214	E5	L101	F17	Q201	G8	R167	F10	R248	H8										
CR101	G16	C139	H13	C215	D6	L102	F16	Q202	G8	R168	F10	R249	E8										
CR102	F17	C140	H14	C216	G8	L103	G17	Q203	G7	R169	H10	R250	E8										
CR103	F17	C141	H13	C217	G8	L104	E15	Q204	G7	R170	H11	R251	D7										
CR104	F17	C142	H13	C218	H6	L105	H15	Q205	G7	R171	H11	R252	D7										
CR105	E15	C143	H14	C219	F6	L106	H14	Q206	F6	R172	H12	R253	F13										
CR106	D15	C144	H13	C220	F6	L107	H15	Q207	F6	R173	H12	R254	G17										
CR107	E15	C145	J14	C221	D5	L108	H14	Q208	F5	R174	E12	R255	F14										
CR108	H16	C146	G17	C222	E5	L109	H15	Q209	E5	R175	F11	R256	G14										
CR109	G16	C147	G17	C223	G8	L110	H14	Q210	G5	R177	G11	R257	H6										
CR110	F16	C148	F14	C224	H8	L112	E12	R100	E16	R183	G11	R258	E8										
CR111	D13	C149	F13	C225	E9	L113	G12	R101	E16	R184	H8	R300	D1										
CR112	G17	C150	E13	C226	E9	L114	G12	R102	E15	R185	H7	R301	D1										
CR113	G17	C151	E13	C227	E9	L115	H13	R103	E15	R186	F8	R302	J1										
CR114	E16	C152	E13	C228	E9	L116	H13	R104	F16	R187	G9	R303	J4										
CR115	D12	C153	G12	C229	F9	L117	H17	R105	F16	R188	H14	R304	J4										
CR116	F11	C154	G13	C230	G9	L118	F13	R106	F16	R189	J15	R305	H4										
CR117	H14	C155	G13	C231	G9	L119	G17	R107	E15	R190	G17	R306	H3										
CR118	H15	C156	G13	C232	H9	L120	F12	R108	D15	R191	E17	R307	H2										
CR119	G17	C157	G13	C233	G6	L121	G11	R109	D14	R192	E17	R308	H4										
CR120	G16	C158	E11	C234	F5	L122	H10	R110	E14	R193	E17	R309	H3										
CR121	E17	C159	F13	C235	G5	L123	H10	R111	E15	R194	E17	R310	G4										
CR122	E17	C160	E10	C236	H5	L124	H10	R112	D14	R195	E17	R311	G4										
CR123	E17	C161	D10	C237	H8	L125	F11	R113	E14	R196	F16	R312	H4										
CR125	F16	C162	F10	C238	E8	L127	H16	R115	F15	R197	F14	R313	H2										
CR126	F10	C163	G11	C239	E8	L128	E8	R116	F15	R198	F10	R314	H3										
CR127	F13	C164	G11	C240	E7	L129	G10	R117	E15	R199	F11	R315	G3										
CR200	H6	C165	G11	C241	F9	L200	G6	R118	F15	R200	H6	R316	H4										
CR201	F7	C166	G11	C242	E8	L201	G6	R119	F15	R201	H6	R317	E6										
CR202	F6	C167	H11	C244	H16	L202	E6	R120	G15	R202	H5	TP100	G6										
CR203	F6	C168	E12	C245	H16	L203	G6	R121	G14	R203	F8	TP101	D6										
CR204	F6	C169	E12	C246	J16	L204	E6	R122	G15	R204	F8	U100	E13										
CR205	F9	C170	E11	C247	H13	L205	E6	R123	G14	R205	F8	U101	G10										
CR206	H9	C171	E11	C248	H12	L206	D5	R124	G16	R206	F7	W1	H9										
CR207	D5	C172	F11	C249	H17	L207	E9	R125	G16	R207	H6	W100	E13										
CR208	F9	C173	G11	C250	E8	L208	E9	R126	E13	R208	G5	W200	H7										
CR209	G9	C174	G11	C251	H8	L209	G5	R127	D13	R209	G6	W201	E7										
CR210	H9	C175	G11	C252	G5	L210	D8	R128	D13	R210	E5	W202	D6										
CR300	J4	C176	H12	C255	E17	L300	F2	R129	D13	R211	E5	W300	H2										
C100	E17	C177	G10	C256	E17	L301	F2	R130	F15	R212	G8	W301	G2										
C101	E16	C178	G10	C257	E15	L302	F2	R131	G13	R213	G8	W302	H2										
C103	F17	C179	H10	C258	H6	L303	G2	R132	G13	R214	G8												
C104	F15	C180	H10	C259	J17	L305	E9	R133	G13	R215	G8												
C105	F14	C181	H10	C260	J16	QA100	F17	R134	G13	R216	G8												
C106	F14	C182	H10	C261	J17	QA101	E13	R135	G17	R217	G7												
C107	F17	C183	H10	C262	J17	QA200	J6	R137	F13	R218	G7												
C109	E15	C184	H10	C300	D1	QA201	D6	R138	F13	R219	G7												
C110	D15	C185	H11	C301	D2	QA202	D8	R139	F13	R220	G8												
C111	D14	C186	H12	C302	H3	QA300	J4	R140	F13	R221	G8												
C112	E14	C187	H11	C303	F2	QA301	H2	R141	G13	R222	J6												
C113	E14	C188	J12	C304	E3	QA302	H4	R142	G13	R223	E6												
C114	F15	C189	E11	C305	F3	QA303	H17	R143	G14	R224	F6												
C115	H15	C190	G10	C306	J17	QA304	E4	R144	G13	R225	F6												
C116	H15	C191	F11	C307	H17	QD100	E14	R145	G17	R226	F5												
C117	H14	C192	E17	C308	F2	QD101	G14	R146	F11	R227	E5												
C118	H15	C193	F15	C309	F2	QD102	D10	R147	E11	R228	E5												
C119	H15	C194	F16	C310	F3	QD103	D11	R148	E10	R229	E5												
C120	H14	C196	J14	C311	F3	QD200	G7	R149	E10	R230	E5												
C121	H15	C197	G10	C312	F3	QD201	H7	R150	F10	R231	H8												
C122	H15	C198	G10	C313	F3	QD202	F7	R151	E10	R232	G8												
C123	H14	C199	G10	C314	F3	QD300	D1	R152	E10	R233	D9												
C124	J15	C200	H6	C315	G3	QD301	D3	R153	G11	R234	D9												
C125	H16	C201	F8	C316	G4	QD302	H1	R154	G11	R235	F9												
C126	G16	C202	F8	C317	G2	Q100	E14	R155	G10	R236	G9												
C127	F17	C203	F7	C318	H4	Q101	E14	R156	H11	R237	G9												
C128	E14	C204	H6	C319	G3	Q102	G13	R157	J11	R238	H9												
C129	D13	C205	H5	C321	G3	Q103	G14	R158	D11	R239	G6												
C130	E12	C206	H5	C322	H17	Q104	F13	R159	E11	R240	G5												
C131	D13	C207	G6	C323	F4	Q105	H11	R160	E12	R241	F5												
C132	G12	C208	G6	GND1	D17	Q106	E11	R161	F12	R242	G5												
C133	F15	C209	G6	GND2	E3	Q107	E11	R162	F11	R243	F5												

COMPONENT SIDE

Frequency Converter (901858)

CAPACITORS

C 100	Ceramic Chip NP0 1n 5% 63V, size 1206	217005
C 101	C Ceramic 100n 20% 50V	213401
C 103	Ceramic Chip NP0 1n 5% 63V, size 1206	217005
C 104	C Ceramic 100n 20% 50V	213401
C 105	C Ceramic 100n 20% 50V	213401
C 106	C Ceramic 100n 20% 50V	213401
C 107	Ceramic Chip NP0 1n 5% 63V, size 1206	217005
C 109	C Ceramic 1n00 -20+80% 63V	213013
C 110	C Ceramic 100n 20% 50V	213401
C 111	C Ceramic 100n 20% 50V	213401
C 112	Ceramic Chip NP0 1n 5% 63V, size 1206	217005
C 113	Ceramic Chip NP0 1n 5% 63V, size 1206	217005
C 114	C Ceramic 100n 20% 50V	213401
C 115	Ceramic Chip NP0 68p 5% 63V, size 1206	217026
C 116	Ceramic Chip NP0 8p2 ±0p25 50V, size 1206	217031
C 117	Ceramic Chip NP0 8p2 ±0p25 50V, size 1206	217031
C 118	Ceramic Chip NP0 100p 5% 63V, size 1206	217004
C 119	Ceramic Chip NP0 22p 5% 63V, size 1206	217003
C 120	Ceramic Chip NP0 33p 5% 63V, size 1206	217023
C 121	Ceramic Chip NP0 68p 5% 63V, size 1206	217026
C 122	Ceramic Chip NP0 22p 5% 63V, size 1206	217003
C 123	Ceramic Chip NP0 68p 5% 63V, size 1206	217026
C 124	Ceramic Chip NP0 47p 5% 63V, size 1206	217014
C 125	Ceramic Chip NP0 1n 5% 63V, size 1206	217005
C 126	Ceramic Chip NP0 2n2 5% 63V, size 1206	217038
C 127	Ceramic Chip NP0 1n 5% 63V, size 1206	217005
C 128	C Ceramic 100n 20% 50V	213401
C 129	Ceramic Chip NP0 1n 5% 63V, size 1206	217005
C 130	Ceramic Chip NP0 1n 5% 63V, size 1206	217005
C 131	C Ceramic 100n 20% 50V	213401
C 132	Ceramic Chip NP0 33p 5% 63V, size 1206	217023
C 133	C Ceramic 100n 20% 50V	213401
C 134	Ceramic Chip NP0 100p 5% 63V, size 1206	217004
C 135	Ceramic Chip X7R 100n 20% 50V, size 1206	217006
C 136	C Ceramic 100n 20% 50V	213401
C 137	Ceramic Chip NP0 100p 5% 63V, size 1206	217004
C 138	Ceramic Chip NP0 120p 5% 63V, size 1206	217036
C 139	Ceramic Chip NP0 56p 5% 63V, size 1206	217030
C 140	Ceramic Chip NP0 150p 5% 63V, size 1206	217027
C 141	Ceramic Chip NP0 120p 5% 63V, size 1206	217036
C 142	Ceramic Chip NP0 33p 5% 63V, size 1206	217023
C 143	Ceramic Chip NP0 120p 5% 63V, size 1206	217036
C 144	Ceramic Chip NP0 33p 5% 63V, size 1206	217023
C 145	Ceramic Chip NP0 68p 5% 63V, size 1206	217026
C 146	Ceramic Chip X7R 10n 20% 63V, size 1206	217020
C 147	Ceramic Chip X7R 100n 20% 50V, size 1206	217006
C 148	Ceramic Chip NP0 1n 5% 63V, size 1206	217005
C 149	Ceramic Chip NP0 47p 5% 63V, size 1206	217014
C 150	Ceramic Chip NP0 6p8 ±0p25 63V, size 1206	217018
C 151	Ceramic Chip NP0 1n 5% 63V, size 1206	217005

C 152	Ceramic Chip NP0 56p 5% 63V, size 1206	217030
C 153	Ceramic Chip NP0 150p 5% 63V, size 1206	217027
C 154	Ceramic Chip NP0 220p 5% 63V, size 1206	217025
C 155	Ceramic Chip NP0 120p 5% 63V, size 1206	217036
C 156	C Ceramic 100n 20% 50V	213401
C 157	C Ceramic 100n 20% 50V	213401
C 158	C Ceramic 100n 20% 50V	213401
C 159	Ceramic Chip NP0 1n 5% 63V, size 1206	217005
C 160	C Ceramic 100n 20% 50V	213401
C 161	C Ceramic 100n 20% 50V	213401
C 162	C Ceramic 100n 20% 50V	213401
C 163	Ceramic Chip NP0 33p 5% 63V, size 1206	217023
C 164	Ceramic Chip NP0 120p 5% 63V, size 1206	217036
C 165	Ceramic Chip X7R 10n 20% 63V, size 1206	217020
C 166	Ceramic Chip NP0 1n 5% 63V, size 1206	217005
C 167	C Ceramic 100n 20% 50V	213401
C 168	Ceramic Chip NP0 1n 5% 63V, size 1206	217005
C 169	Ceramic Chip NP0 1n 5% 63V, size 1206	217005
C 170	Ceramic Chip NP0 1n 5% 63V, size 1206	217005
C 171	Ceramic Chip NP0 1n 5% 63V, size 1206	217005
C 172	C Ceramic 100n 20% 50V	213401
C 173	Ceramic Chip NP0 220p 5% 63V, size 1206	217025
C 174	Ceramic Chip NP0 330p 5% 63V, size 1206	217034
C 175	Ceramic Chip NP0 220p 5% 63V, size 1206	217025
C 176	C Ceramic 100n 20% 50V	213401
C 177	Ceramic Chip X7R 100n 20% 50V, size 1206	217006
C 178	Ceramic Chip NP0 1n 5% 63V, size 1206	217005
C 179	Ceramic Chip NP0 1n 5% 63V, size 1206	217005
C 180	Ceramic Chip NP0 47p 5% 63V, size 1206	217014
C 181	Ceramic Chip NP0 2n2 5% 63V, size 1206	217038
C 182	Ceramic Chip NP0 150p 5% 63V, size 1206	217027
C 183	Ceramic Chip NP0 2n2 5% 63V, size 1206	217038
C 184	Ceramic Chip NP0 220p 5% 63V, size 1206	217025
C 185	Ceramic Chip NP0 680p 5% 63V size 1206	217042
C 186	C Ceramic 100n 20% 50V	213401
C 187	MKT, 0.22/50/10, R:3*7.5*4.6, RM1	241101
C 188	MKT, 0.22/50/10, R:3*7.5*4.6, RM1	241101
C 189	C Ceramic 100n 20% 50V	213401
C 190	Ceramic Chip X7R 10n 20% 63V, size 1206	217020
C 191	C Ceramic 100n 20% 50V	213401
C 192	Ceramic Chip NP0 1n 5% 63V, size 1206	217005
C 193	Ceramic Chip X7R 10n 20% 63V, size 1206	217020
C 194	Ceramic Chip X7R 10n 20% 63V, size 1206	217020
C 196	Ceramic Chip X7R 100n 20% 50V, size 1206	217006
C 197	Ceramic Chip NP0 150p 5% 63V, size 1206	217027
C 198	Ceramic Chip NP0 390p 5% 63V, size 1206	217037
C 199	Ceramic Chip NP0 390p 5% 63V, size 1206	217037
C 200	C Solid Aluminium 68u 20% 6v3 Short Type	265111
C 201	C Solid Aluminium 10u 20% 16V Short Type	265108
C 202	C Ceramic 100n 20% 50V	213401
C 203	Ceramic Chip NP0 1n 5% 63V, size 1206	217005
C 204	C Ceramic 150p 2% 100V N750	213212
C 205	C Ceramic 100n 20% 50V	213401
C 206	MKT, 0.47/63/10, R:4.5*9*7.2, RM2	241073

C 207	Ceramic Chip NP0 100p 5% 63V, size 1206	217004
C 208	Ceramic Chip NP0 12p 5% 63V, size 1206	217013
C 209	Ceramic Chip NP0 220p 5% 63V, size 1206	217025
C 210	Ceramic Chip NP0 22p 5% 63V, size 1206	217003
C 211	Ceramic Chip NP0 220p 5% 63V, size 1206	217025
C 212	Ceramic Chip NP0 1n 5% 63V, size 1206	217005
C 213	Ceramic Chip NP0 1n 5% 63V, size 1206	217005
C 214	C Ceramic 100n 20% 50V	213401
C 215	Ceramic Chip NP0 1n 5% 63V, size 1206	217005
C 216	C Ceramic 100n 20% 50V	213401
C 217	C Solid Aluminium 10u 20% 16V Short Type	265108
C 218	C Ceramic 100n 20% 50V	213401
C 219	Ceramic Chip NP0 3p3 p25 63V, size 1206	217001
C 220	Ceramic Chip NP0 3p3 p25 63V, size 1206	217001
C 221	Ceramic Chip NP0 22p 5% 63V, size 1206	217003
C 222	Ceramic Chip NP0 1n 5% 63V, size 1206	217005
C 223	C Ceramic 100n 20% 50V	213401
C 224	C Ceramic 100n 20% 50V	213401
C 225	Ceramic Chip NP0 220p 5% 63V, size 1206	217025
C 226	Ceramic Chip NP0 33p 5% 63V, size 1206	217023
C 227	Ceramic Chip NP0 330p 5% 63V, size 1206	217034
C 228	Ceramic Chip NP0 120p 5% 63V, size 1206	217036
C 229	Ceramic Chip NP0 220p 5% 63V, size 1206	217025
C 230	Ceramic Chip NP0 1n 5% 63V, size 1206	217005
C 231	Ceramic Chip NP0 1n 5% 63V, size 1206	217005
C 232	Ceramic Chip NP0 1n 5% 63V, size 1206	217005
C 233	C Solid Aluminium 10u 20% 16V Short Type	265108
C 234	C Solid Aluminium 68u 20% 6v3 Short Type	265111
C 235	C Ceramic 100n 20% 50V	213401
C 236	C Solid Aluminium 10u 20% 16V Short Type	265108
C 237	C Ceramic 100n 20% 50V	213401
C 238	C Ceramic 100n 20% 50V	213401
C 239	Ceramic Chip NP0 1n 5% 63V, size 1206	217005
C 240	C Ceramic 100n 20% 50V	213401
C 241	Ceramic Chip X7R 10n 20% 63V, size 1206	217020
C 242	Ceramic Chip NP0 1n 5% 63V, size 1206	217005
C 244	Ceramic Chip NP0 220p 5% 63V, size 1206	217025
C 245	Ceramic Chip NP0 1n 5% 63V, size 1206	217005
C 246	Ceramic Chip NP0 390p 5% 63V, size 1206	217037
C 247	Ceramic Chip X7R 10n 20% 63V, size 1206	217020
C 248	Ceramic Chip X7R 10n 20% 63V, size 1206	217020
C 249	Ceramic Chip NP0 33p 5% 63V, size 1206	217023
C 250	Ceramic Chip X7R 10n 20% 63V, size 1206	217020
C 251	Ceramic Chip X7R 100n 20% 50V, size 1206	217006
C 252	C Solid Aluminium 10u 20% 16V Short Type	265108
C 255	Ceramic Chip NP0 1n 5% 63V, size 1206	217005
C 256	Ceramic Chip NP0 1n 5% 63V, size 1206	217005
C 257	Ceramic Chip NP0 1n 5% 63V, size 1206	217005
C 258	Ceramic Chip X7R 22n 5% 63V, size 1206	217044
C 259	Ceramic Chip X7R 100n 20% 50V, size 1206	217006
C 260	Ceramic Chip X7R 100n 20% 50V, size 1206	217006
C 261	Ceramic Chip X7R 100n 20% 50V, size 1206	217006
C 262	Ceramic Chip X7R 100n 20% 50V, size 1206	217006
C 263	Ceramic Chip X7R 10n 20% 63V, size 1206	217020

C 300	C Ceramic 100n 20% 50V	213401
C 301	C Ceramic 100n 20% 50V	213401
C 302	C Ceramic 100n 20% 50V	213401
C 303	C Ceramic 100n 20% 50V	213401
C 304	C Ceramic 100n 20% 50V	213401
C 305	C Solid Aluminium 10u 20% 16V Short Type	265108
C 306	C Ceramic 100n 20% 50V	213401
C 307	C Ceramic 100n 20% 50V	213401
C 308	C Ceramic 100n 20% 50V	213401
C 309	C Ceramic 100n 20% 50V	213401
C 310	C Ceramic 100n 20% 50V	213401
C 311	C Ceramic 100n 20% 50V	213401
C 312	C Solid Aluminium 10u 20% 16V Short Type	265108
C 313	C Solid Aluminium 10u 20% 16V Short Type	265108
C 314	C Ceramic 100n 20% 50V	213401
C 315	C Ceramic 100n 20% 50V	213401
C 316	Ceramic Chip X7R 100n 20% 50V, size 1206	217006
C 317	C Ceramic 100n 20% 50V	213401
C 318	Ceramic Chip NP0 3n3 5% 63V, size 1206	217043
C 319	C Ceramic 100n 20% 50V	213401
C 321	C Solid Aluminium 10u 20% 16V Short Type	265108
C 322	C Solid Aluminium 33u 20% 10V Short Type	265105
C 323	Electrolytic 100/25, 2000h/85°, R:6.3*11, RM2	261073

DIODES

CR 100	Diode general purpose BAS16 SOT23	352006
CR 101	Diode general purpose BAS16 SOT23	352006
CR 102	Diode BAT18 band switching SOT23	352005
CR 103	Diode BAT18 band switching SOT23	352005
CR 104	Diode BAT18 band switching SOT23	352005
CR 105	Diode BAT18 band switching SOT23	352005
CR 106	Diode BAT18 band switching SOT23	352005
CR 107	Diode general purpose BAS16 SOT23	352006
CR 108	Diode BAT18 band switching SOT23	352005
CR 109	Diode BAT18 band switching SOT23	352005
CR 110	Diode BAT18 band switching SOT23	352005
CR 111	Diode BAT18 band switching SOT23	352005
CR 112	Diode BAT18 band switching SOT23	352005
CR 113	Diode BA482 Si Vr-35V If-100mA	350054
CR 114	Diode BAT18 band switching SOT23	352005
CR 115	Diode BAT18 band switching SOT23	352005
CR 116	Diode general purpose BAS16 SOT23	352006
CR 117	Diode Pin BA885 SOT23	352012
CR 118	Diode Pin BA885 SOT23	352012
CR 119	Diode BAT18 band switching SOT23	352005
CR 120	Diode general purpose BAS16 SOT23	352006
CR 121	Diode general purpose BAS16 SOT23	352006
CR 122	Diode Pin HSMP-3800 SOT23	352013
CR 123	Diode general purpose BAS16 SOT23	352006
CR 125	Diode BAT18 band switching SOT23	352005
CR 126	Diode Pin BA885 SOT23	352012
CR 127	Diode Pin BA885 SOT23	352012
CR 200	Diode general purpose BAS16 SOT23	352006

CR 201	Diode BBY40 variable capacitance diode 28V 50nA SOT23	352001
CR 202	Diode BBY40 variable capacitance diode 28V 50nA SOT23	352001
CR 203	Diode BBY40 variable capacitance diode 28V 50nA SOT23	352001
CR 204	Diode BBY40 variable capacitance diode 28V 50nA SOT23	352001
CR 205	Diode BAT18 band switching SOT23	352005
CR 206	Diode BAT18 band switching SOT23	352005
CR 207	Diode dual schottky HSMS-2812 SOT23	352003
CR 208	Diode BAT18 band switching SOT23	352005
CR 209	Diode BAT18 band switching SOT23	352005
CR 210	Diode BAT18 band switching SOT23	352005
CR 300	Diode BAV10 Si Vr-60V If-600mA	350022

CONNECTORS

J 1	Conn.Jack-Bulkh r.ang.SMB	800329
J 2	Conn.Jack-Bulkh r.ang.SMB	800329
J 300	DIN 41612 64 pol male 90°, C/2 class II	805958

CHOKES

L 100	Chip Coil 1u 5%	703802
L 101	Choke Mini 10u 5% 0.23A	703077
L 102	Choke Mini 10u 5% 0.23A	703077
L 103	Choke Mini 10u 5% 0.23A	703077
L 104	Choke Mini 10u 5% 0.23A	703077
L 105	Chip Coil 100nH 20%	703801
L 106	Chip Coil 150n 10%	703813
L 107	Chip Coil 100nH 20%	703801
L 108	Chip Coil 150n 10%	703813
L 109	Chip Coil 100nH 20%	703801
L 110	Chip Coil 100nH 20%	703801
L 112	Chip Coil 1u 5%	703802
L 113	Chip Coil 220n 10%	703812
L 114	Chip Coil 150n 10%	703813
L 115	Chip Coil 220n 10%	703812
L 116	Chip Coil 220n 10%	703812
L 117	Choke HF Mini 470u 5% 170mA	703080
L 118	Chip Coil 68nH 10%	703815
L 119	Choke HF Mini 470u 5% 170mA	703080
L 120	Chip coil 470n 10% size 1210	703811
L 121	Chip coil 470n 10% size 1210	703811
L 122	Chip Coil 3u3 10%	703808
L 123	Chip Coil 3u3 10%	703808
L 124	Chip Coil 3u3 10%	703808
L 125	Chip Coil 330nH 10%	703809
L 127	Chip Coil 1u5 10% size 1210	703810
L 128	Chip Coil 1u 5%	703802
L 129	Chip coil 470n 10% size 1210	703811
L 200	Choke Mini 10u 5% 0.23A	703077
L 201	Choke Mini 10u 5% 0.23A	703077
L 202	Choke Mini 10u 5% 0.23A	703077
L 203	Choke Mini 10u 5% 0.23A	703077
L 204	Tuneable Inductor 4.5 Turn	740252
L 205	Chip Coil 1u 5%	703802

L 206	Chip Coil 1u 5%	703802
L 207	Chip coil 470n 10% size 1210	703811
L 208	Chip coil 470n 10% size 1210	703811
L 209	Chip Coil 1u 5%	703802
L 210	Chip Coil 1u 5%	703802
L 300	RF-choke six-hole core green	731204
L 301	RF-choke six-hole core green	731204
L 302	RF-choke six-hole core green	731204
L 303	RF-choke six-hole core green	731204
L 305	Chip Coil 330nH 10%	703809

TRANSISTORS

Q 100	Transistor BF840 Sot23 NPN	361008
Q 101	Transistor BF840 Sot23 NPN	361008
Q 102	Transistor BFR93A SMD npn	361002
Q 103	Transistor BFR93A SMD npn	361002
Q 104	Transistor BF840 Sot23 NPN	361008
Q 105	Transistor BFR93A SMD npn	361002
Q 106	Transistor BF840 Sot23 NPN	361008
Q 107	Transistor BF840 Sot23 NPN	361008
Q 108	Transistor BFR93A SMD npn	361002
Q 109	Transistor BF840 Sot23 NPN	361008
Q 110	Transistor BFR93A SMD npn	361002
Q 200	Transistor BFR93A SMD npn	361002
Q 201	Transistor BFT93 SOT-23 PNP	361004
Q 202	Transistor BFR93A SMD npn	361002
Q 203	Transistor BFR93A SMD npn	361002
Q 204	Transistor BFT93 SOT-23 PNP	361004
Q 205	Transistor BFR93A SMD npn	361002
Q 206	Transistor SST309 Jfet N-Channel SOT-23	361007
Q 207	Transistor SST309 Jfet N-Channel SOT-23	361007
Q 208	Transistor BC857B PNP SOT23	361010
Q 209	Transistor BC849C Sot23	361009
Q 210	Transistor BC849C Sot23	361009

INTEGRATED ANALOG CIRCUITS

QA 100	IC MAR-4 Monolithic RF Amplifier	364823
QA 101	IC MAR-4 Monolithic RF Amplifier	364823
QA 200	IC LF356 op amp	364203
QA 201	IC MAR-4 Monolithic RF Amplifier	364823
QA 202	IC MAR-4 Monolithic RF Amplifier	364823
QA 300	IC LM324 Low Power OP-Amp SO-14	366010
QA 301	IC 10124 quad TTL-ECL buf	364481
QA 302	IC LM324 Low Power OP-Amp SO-14	366010
QA 303	IC L7905CT - 5V regulator	364884
QA 304	IC CM2931 reg. 5V to92	364898

INTEGRATED DIGITAL CIRCUITS

QD 100	IC 10H116 Triple Line Receiver	364729
QD 101	IC 10231 dual D ff	364485
QD 102	IC 10138 dec counter	364324
QD 103	IC 10H116 Triple Line Receiver	364729
QD 200	IC MC12040 Phase-Frequency Detecter	364842
QD 201	IC 10116 tripl line rec.	364331
QD 202	IC 10138 dec counter	364324
QD 300	IC 74HC14 Hex Inv Schmitt Trigger SO-14	366009
QD 301	RExxx Seriel Bus Receiver For 6 Adr. 364-876	369331
QD 302	IC 4094 8-Stage Shift-And-Store Bus Reg SO-16	366011

RESISTORS

R 100	Metal Film Chip 316E 1% 0.2W TC50	147072
R 101	Metal Film Chip 316E 1% 0.2W TC50	147072
R 102	Metal Film Chip 5K62 1% 0.2W TC50	147086
R 103	Metal Film Chip 3K16 1% 0.2W TC50	147055
R 104	Metal Film Chip 1K00 1% 0.2W TC50	147040
R 105	Metal Film Chip 1K00 1% 0.2W TC50	147040
R 106	Metal Film Chip 1K00 1% 0.2W TC50	147040
R 107	Metal Film Chip 3K16 1% 0.2W TC50	147055
R 108	Metal Film Chip 1K78 1% 0.2W TC50	147037
R 109	Metal Film Chip 1K78 1% 0.2W TC50	147037
R 110	Metal Film Chip 100E 1% 0.250W TC50	147014
R 111	Metal Film Chip 316E 1% 0.2W TC50	147072
R 112	Metal Film Chip 1K78 1% 0.2W TC50	147037
R 113	Metal Film Chip 1K00 1% 0.2W TC50	147040
R 115	Metal Film Chip 464E 1% 0.2W TC50	147035
R 116	Metal Film Chip 464E 1% 0.2W TC50	147035
R 117	Metal Film Chip 1K00 1% 0.2W TC50	147040
R 118	Metal Film Chip 464E 1% 0.2W TC50	147035
R 119	Metal Film Chip 464E 1% 0.2W TC50	147035
R 120	Metal Film Chip 1K00 1% 0.2W TC50	147040
R 121	Metal Film Chip 1K00 1% 0.2W TC50	147040
R 122	Metal Film Chip 31E6 1% 0.2W TC50	147075
R 123	Metal Film Chip 31E6 1% 0.2W TC50	147075
R 124	Metal Film Chip 1K00 1% 0.2W TC50	147040
R 125	Metal Film Chip 1K00 1% 0.2W TC50	147040
R 126	Metal Film Chip 1K00 1% 0.2W TC50	147040
R 127	Metal Film Chip 2E15 1% 0.250W TC50	147013
R 128	Metal Film Chip 383E 1% 0.2W TC50	147058
R 129	Metal Film Chip 383E 1% 0.2W TC50	147058
R 130	Metal Film Chip 464E 1% 0.2W TC50	147035
R 131	Metal Film Chip 46E4 1% 0.2W TC50	147016
R 132	Metal Film Chip 1K47 1% 0.2W TC50	147080
R 133	Metal Film Chip 464E 1% 0.2W TC50	147035
R 134	Metal Film Chip 12E1 1% 0.2W TC50	147023
R 135	Metal Film Chip 316E 1% 0.2W TC50	147072
R 137	Metal Film Chip 21E5 1% 0.2W TC50	147052
R 138	Metal Film Chip 100E 1% 0.250W TC50	147014
R 139	Metal Film Chip 2K61 1% 0.2W TC50	147038
R 140	Metal Film Chip 100E 1% 0.250W TC50	147014

R 141	Metal Film Chip 2K61 1% 0.2W TC50	147038
R 142	Metal Film Chip 1K00 1% 0.2W TC50	147040
R 143	Metal Film Chip 825E 1% 0.2W TC50	147077
R 144	Metal Film Chip 68E1 1% 0.2W TC50	147019
R 145	Metal Film Chip 261E 1% 0.2W TC50	147045
R 146	Metal Film Chip 316E 1% 0.2W TC50	147072
R 147	Metal Film Chip 1K00 1% 0.2W TC50	147040
R 148	Metal Film Chip 464E 1% 0.2W TC50	147035
R 149	Metal Film Chip 464E 1% 0.2W TC50	147035
R 150	Metal Film Chip 464E 1% 0.2W TC50	147035
R 151	Metal Film Chip 464E 1% 0.2W TC50	147035
R 152	Metal Film Chip 464E 1% 0.2W TC50	147035
R 153	Metal Film Chip 46E4 1% 0.2W TC50	147016
R 154	Metal Film Chip 1K78 1% 0.2W TC50	147037
R 155	Metal Film Chip 316E 1% 0.2W TC50	147072
R 156	Metal Film Chip 1K47 1% 0.2W TC50	147080
R 157	Metal Film Chip 464E 1% 0.2W TC50	147035
R 158	Metal Film Chip 1K00 1% 0.2W TC50	147040
R 159	Metal Film Chip 1K78 1% 0.2W TC50	147037
R 160	Metal Film Chip 100E 1% 0.250W TC50	147014
R 161	Metal Film Chip 1K78 1% 0.2W TC50	147037
R 162	Metal Film Chip 1K00 1% 0.2W TC50	147040
R 163	Metal Film Chip 46E4 1% 0.2W TC50	147016
R 164	Metal Film Chip 5K62 1% 0.2W TC50	147086
R 165	Metal Film Chip 464E 1% 0.2W TC50	147035
R 166	Metal Film Chip 46E4 1% 0.2W TC50	147016
R 167	Metal Film Chip 100E 1% 0.250W TC50	147014
R 168	Metal Film Chip 100E 1% 0.250W TC50	147014
R 169	Metal Film Chip 46E4 1% 0.2W TC50	147016
R 170	Metal Film Chip 3K16 1% 0.2W TC50	147055
R 171	Metal Film Chip 1K00 1% 0.2W TC50	147040
R 172	Metal Film Chip 464E 1% 0.2W TC50	147035
R 173	Metal Film Chip 100E 1% 0.250W TC50	147014
R 174	Metal Film Chip 1K00 1% 0.2W TC50	147040
R 175	Metal Film Chip 8K25 1% 0.2W TC50	147065
R 177	Metal Film Chip 2K61 1% 0.2W TC50	147038
R 183	Metal Film Chip 6K81 1% 0.2W TC50	147090
R 184	Metal Film Chip 215E 1% 0.2W TC50	147109
R 185	Metal Film Chip 147E 1% 0.2W TC50	147033
R 186	Metal Film Chip 178E 1% 0.2W TC50	147046
R 187	Metal Film Chip 68E1 1% 0.2W TC50	147019
R 188	Metal Film Chip 1K21 1% 0.2W TC50	147061
R 189	Metal Film Chip 1K21 1% 0.2W TC50	147061
R 190	Metal Film Chip 316E 1% 0.2W TC50	147072
R 191	Metal Film Chip 5K62 1% 0.2W TC50	147086
R 192	Metal Film Chip 147E 1% 0.2W TC50	147033
R 193	Metal Film Chip 14K7 1% 0.2W TC50	147113
R 194	Metal Film Chip 121K 1% 0.2W TC50	147103
R 195	Metal Film Chip 10K0 1% 0.2W TC50	147039
R 196	Metal Film Chip 3K16 1% 0.2W TC50	147055
R 197	Metal Film Chip 4K64 1% 0.2W TC50	147043
R 198	Metal Film Chip 21E5 1% 0.2W TC50	147052
R 199	Metal Film Chip 4K64 1% 0.2W TC50	147043
R 200	Metal Film Chip 1K00 1% 0.2W TC50	147040

R 201	Metal Film Chip 1K00 1% 0.2W TC50	147040
R 202	Metal Film Chip 21E5 1% 0.2W TC50	147052
R 203	Metal Film Chip 21E5 1% 0.2W TC50	147052
R 204	Metal Film Chip 1K21 1% 0.2W TC50	147061
R 205	Metal Film Chip 21E5 1% 0.2W TC50	147052
R 206	Metal Film Chip 100E 1% 0.250W TC50	147014
R 207	Metal Film Chip 383E 1% 0.2W TC50	147058
R 208	Metal Film Chip 215E 1% 0.2W TC50	147109
R 209	Metal Film Chip 5K62 1% 0.2W TC50	147086
R 210	Metal Film Chip 383E 1% 0.2W TC50	147058
R 211	Metal Film Chip 383E 1% 0.2W TC50	147058
R 212	Metal Film Chip 464E 1% 0.2W TC50	147035
R 213	Metal Film Chip 12E1 1% 0.2W TC50	147023
R 214	Metal Film Chip 178E 1% 0.2W TC50	147046
R 215	Metal Film Chip 12E1 1% 0.2W TC50	147023
R 216	Metal Film Chip 464E 1% 0.2W TC50	147035
R 217	Metal Film Chip 464E 1% 0.2W TC50	147035
R 218	Metal Film Chip 12E1 1% 0.2W TC50	147023
R 219	Metal Film Chip 178E 1% 0.2W TC50	147046
R 220	Metal Film Chip 12E1 1% 0.2W TC50	147023
R 221	Metal Film Chip 464E 1% 0.2W TC50	147035
R 222	Metal Film Chip 21E5 1% 0.2W TC50	147052
R 223	Metal Film Chip 100E 1% 0.250W TC50	147014
R 224	Metal Film Chip 100K 1% 0.2W TC50	147062
R 225	Metal Film Chip 100K 1% 0.2W TC50	147062
R 226	Metal Film Chip 100E 1% 0.250W TC50	147014
R 227	Metal Film Chip 10K0 1% 0.2W TC50	147039
R 228	Metal Film Chip 1M00 1% 0.2W TC50	147084
R 229	Metal Film Chip 10K0 1% 0.2W TC50	147039
R 230	Metal Film Chip 1M00 1% 0.2W TC50	147084
R 231	Metal Film Chip 464E 1% 0.2W TC50	147035
R 232	Metal Film Chip 464E 1% 0.2W TC50	147035
R 233	Metal Film Chip 464E 1% 0.2W TC50	147035
R 234	Metal Film Chip 46E4 1% 0.2W TC50	147016
R 235	Metal Film Chip 2K15 1% 0.2W TC50	147051
R 236	Metal Film Chip 1K00 1% 0.2W TC50	147040
R 237	Metal Film Chip 1K00 1% 0.2W TC50	147040
R 238	Metal Film Chip 1K00 1% 0.2W TC50	147040
R 239	Metal Film Chip 6K81 1% 0.2W TC50	147090
R 240	Metal Film Chip 3K16 1% 0.2W TC50	147055
R 241	Metal Film Chip 464E 1% 0.2W TC50	147035
R 242	Metal Film Chip 100E 1% 0.250W TC50	147014
R 243	Metal Film Chip 56K2 1% 0.2W TC50	147079
R 244	Metal Film Chip 21K5 1% 0.2W TC50	147066
R 245	Metal Film Chip 1M00 1% 0.2W TC50	147084
R 246	Cermet Trimpot 47K 20% 0.5W TC70	182314
R 247	Metal Film Chip 464E 1% 0.2W TC50	147035
R 248	Metal Film Chip 464E 1% 0.2W TC50	147035
R 249	Metal Film Chip 464E 1% 0.2W TC50	147035
R 250	Metal Film Chip 464E 1% 0.2W TC50	147035
R 251	Metal Film Chip 383E 1% 0.2W TC50	147058
R 252	Metal Film Chip 383E 1% 0.2W TC50	147058
R 253	Metal Film Chip 6K81 1% 0.2W TC50	147090
R 254	Metal Film Chip 3K16 1% 0.2W TC50	147055

R 255	Metal Film Chip 100E 1% 0.250W TC50	147014
R 256	Metal Film Chip 100E 1% 0.250W TC50	147014
R 257	Metal Film Chip 562E 1% 0.2W TC50	147036
R 258	Metal Film Chip 1K00 1% 0.2W TC50	147040
R 300	Metal Film Chip 21K5 1% 0.2W TC50	147066
R 301	Metal Film Chip 21K5 1% 0.2W TC50	147066
R 302	Metal Film Chip 5K62 1% 0.2W TC50	147086
R 303	Metal Film Chip 5K62 1% 0.2W TC50	147086
R 304	Metal Film Chip 10K0 1% 0.2W TC50	147039
R 305	Metal Film Chip 10K0 1% 0.2W TC50	147039
R 306	Metal Film Chip 464E 1% 0.2W TC50	147035
R 307	Metal Film Chip 5K62 1% 0.2W TC50	147086
R 308	Metal Film Chip 5K62 1% 0.2W TC50	147086
R 309	Metal Film Chip 464E 1% 0.2W TC50	147035
R 310	Metal Film Chip 4K64 1% 0.2W TC50	147043
R 311	Metal Film Chip 4K64 1% 0.2W TC50	147043
R 312	Metal Film Chip 5K62 1% 0.2W TC50	147086
R 313	Metal Film Chip 5K62 1% 0.2W TC50	147086
R 314	Metal Film Chip 464E 1% 0.2W TC50	147035
R 315	Metal Film Chip 10K0 1% 0.2W TC50	147039
R 316	Metal Film Chip 825E 1% 0.2W TC50	147077
R 317	Metal Film Chip 56E2 1% 0.2W TC50	147030

TESTPOINTS

TP 100	Pin header 3 pol straight l:6.7mm with lock	805894
TP 101	Pin header 3 pol straight l:6.7mm with lock	805894

MIXERS

U 100	Double Balanced Mixer 1-500MHZ SBL-1	910120
U 101	Double Balanced Mixer 1-500MHZ SBL-1	910120

CABLES

W 1	Coax Cable for pcb mounting 140mm	617060
W 100	Coax Cable for pcb mounting 140mm	617060
W 300	Coax Cable For PCB Mounting 200mm	618064
W 301	Coax Cable for pcb mounting 140mm	617060

MISCELLANEOUS

Screw Pozidrive panhead M2.5x8	008208
Screw Pozidrive Panhead M3X10	008310
Screw Pozidrive Countersunk M2,5x20	009220
Nut hexagon M3	031302
Lock washer D3,2/5,5x0,45	046405
Tubular Rivet 2.5X10	060310
Tubular Rivet Ø2,5x0,25x3	060408
Plug Soldering U 6X2X2.8	061128
Bushing ø8/2,8x13	066155
Mounting Acc. for TO-220	816163
Rectangular Washer F. TO220	816178
Insulation Bushing F. TO-220	816214

	L-piece for PCB	857041
	Spring For RE122 Synthesizer 4	878081
	Shield Box 11 Top	881030
	Shield Box 11 Botton	881031
	Shield Box 12 Top	881032
	Shield Box 12 Botton	881033
	Cover For 881-030	881041
	Cover Plate Middle for RE122	933089
	PCB For RE122 Frequency Converter	971404
	Labels For PCB With 72 Pcs Each Of Ark 48x7	980722
QDS301	Socket DIL 24 pol, h:4.95 300mil	816274

983-414.11a